Steam Traps

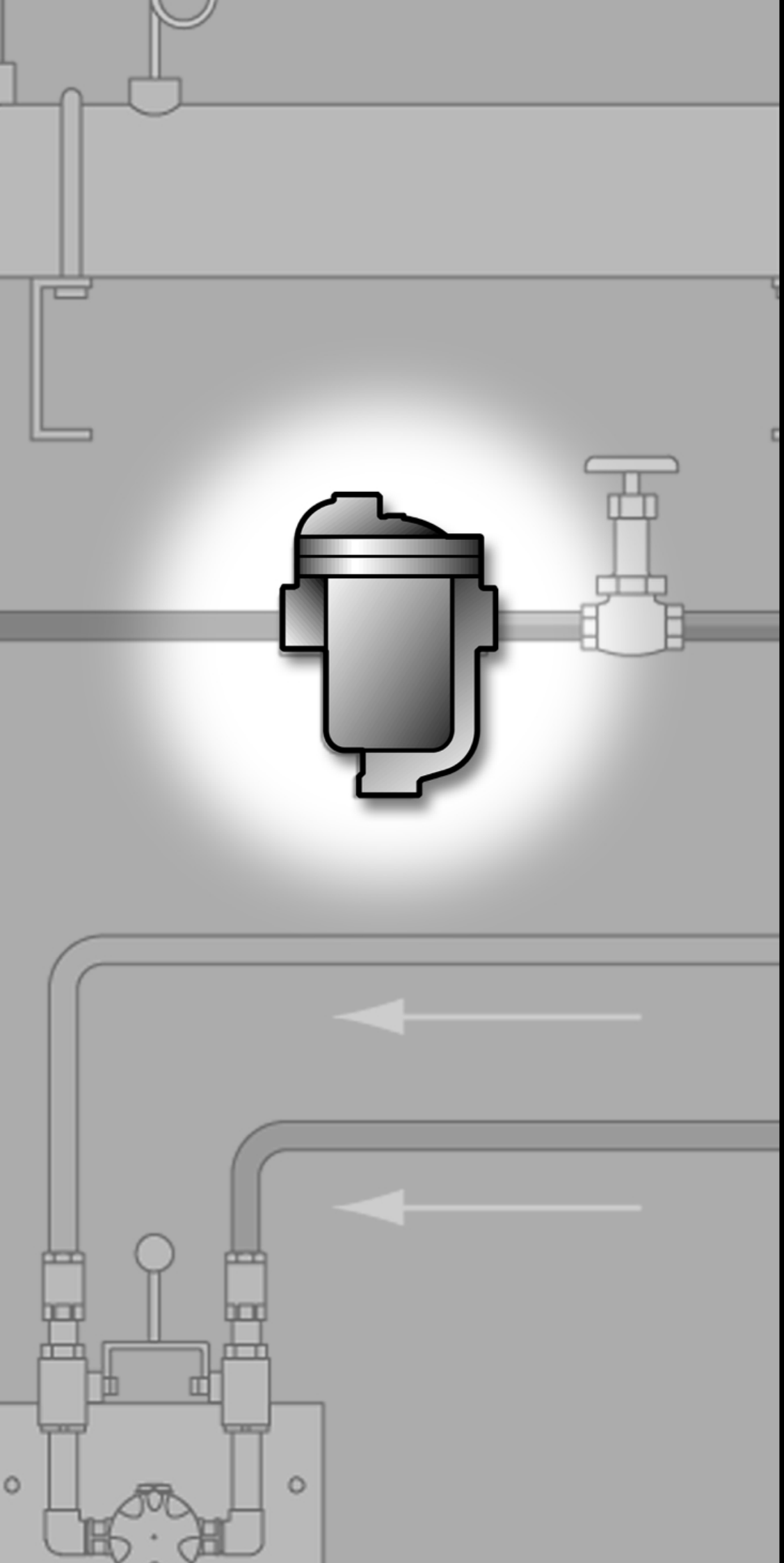

Armstrong

Armstrong®
Intelligent System Solutions™
STEAM • AIR • HOT WATER

Pay less money for energy – and more attention to the environment.

It's pretty obvious, really. An efficient steam trap wastes less energy, which means you burn less fuel and reduce emissions. The results are energy savings and a cleaner, healthier environment. By helping companies manage energy, Armstrong steam traps are also helping protect the world we all share.

As a steam trap wears, it loses efficiency and begins to waste energy. But Armstrong inverted bucket traps last years longer than other traps. They operate more efficiently longer because the inverted bucket is the most reliable steam trap operating principle known.

Clearly, the longer an efficient trap lasts, the more it reduces energy wasted, fuel burned and pollutants released into the air. It's an all-around positive situation that lets the environment win, too. Bringing energy down to earth in your facility could begin with a renewed focus on your steam system, especially your steam traps. Said another way: Zeroing in your steam traps is an easy way to pay less money for energy – and more attention to the environment.

Companies around the world are beginning to realize that rather than being separate challenges, energy and the environment are and have always been a single mission. And that quality management in one area will surely impact the other.



Armstrong International SA • Parc Industriel des Hauts-Sarts (2e Avenue) • 4040 Herstal • Belgium
Tel.: +32 (0)4 240 90 90 • Fax: +32 (0)4 248 13 61
www.armstrong.be • marketing@armstrong.be

Steam Trap ID Charts

Table ST-65-1. Armstrong Steam Traps

Illustration	Type	Flow Direction	Connection Type	Max. Allow. Press. barg	TMA °C	Body Material	Model	Max. Oper. Press. barg	Connection Size							Located on Page
									1/2"	3/4"	1"	1 1/4"	1 1/2"	2"	2 1/2"	
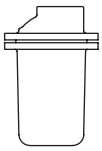	**Series 200** Inverted Bucket Capacities to **9 000** kg/h	↑	Screwed Flanged †	17	232	ASTM A48 Class 30 Cast Iron	**211** **212** **213** **214** **215** **216**	17 17 17 17 17 17	● ● ● 	 ● ● 	 ● ● ● ●	 ● ● 	 ● ●	 ●	 	ST-74
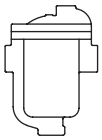	**Series 800** Inverted Bucket w/Strainer Capacities to **9 000** kg/h	→	Screwed Flanged †	17	232	ASTM A48 Class 30 Cast Iron	**800** **811** **812** **813** **814** **815** **816**	10 17 17 17 17 17 17	● ● ● 	● ● ● ● 	 ● ● ● ● 	 ● ● 	 ● 	 ● ●	 ●	ST-76
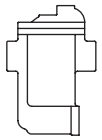	**Series 880** Inverted Bucket Capacities to **2 000** kg/h	→	Screwed Flanged †	17	232	ASTM A48 Class 30 Cast Iron	**880** **881** **882** **883**	10 17 17 17	● ● ● 	● ● ● ●	● ●	 ●	 	 	 	ST-80
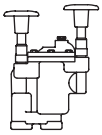	**TVS-800** Trap Valve Station Capacities to **2 000** kg/h	→	Screwed Flanged †	17	232	ASTM A48 Class 30 Cast Iron	**TVS-811** **TVS-812** **TVS-813**	17 17 17	● ● 	● ● ●	 ●	 	 	 	 	ST-82
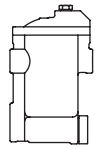	**Series 980** Inverted Bucket Capacities to **2 000** kg/h	→	Screwed Socketweld Flanged †	41	343	ASTM A216 WCB Carbon Steel	**981** **983**	41 41	● 	● ●	 ●	 	 	 	 	ST-86
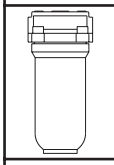	**Model EM** Inverted Bucket Capacities to **480** kg/h	→	Screwed Socketweld Flanged †	32	250	C 22.8	**EM**	32	●	●						ST-88
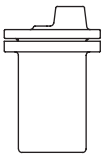	**Series 300** Inverted Bucket Capacities to **9 000** kg/h	↑	Screwed Socketweld Flanged †	★★ 53 41 74 78 70 76	★★ 371	ASTM A105 Forged Steel	**310** **312** **313** **314** **315** **316**	27,5 41,5 45 45 45 45	● ● ● 	● ● ● 	 ● ● ● ●	 ● ●	 ● ●	 	 	ST-90
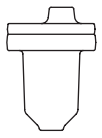	**Model 411G** Inverted Bucket Capacities to **590** kg/h	↑	Screwed Socketweld Flanged †	★★ 69	★★ 371	ASTM A105 Forged Steel	**411G**	69	●	●						ST-92
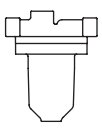	**Model 421** Inverted Bucket Capacities to **590** kg/h	→	Screwed Socketweld Flanged †	★★ 69	★★ 371	Body ASTM A105 Forged Steel Cap ASTM A216 WCB	**421**	69	●	●						ST-92
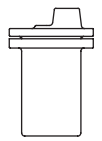	**Series 400** Inverted Bucket Capacities to **9 000** kg/h	↑	Screwed Socketweld Flanged †	★★ 83 76 117	★★ 427	ASTM A182 F22 Forged Steel	**413** **415** **416**	69 69 69	● 	● 	● ● 	 ● 	 ● ●	 	 	ST-94

★★ See tables on pages ST-90, ST-92 and ST-94 for complete temperature/pressure rating information.
† Operating pressure and temperature may be limited depending on the class of flange selected.

Steam Trap ID Charts

Table ST-66-1. Armstrong Steam Traps

Illustration	Type	Flow Direction	Connection Type	Max. Allow. Press. barg	TMA °C	Body Material	Model	Max. Oper. Press. barg	Connection Size							Located on Page
									3/8"	1/2"	3/4"	1"	1 1/4"	1 1/2"	2"	
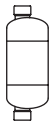	**Model 401-SH** Inverted Bucket Capacities to **350** kg/h		Screwed Socketweld Flanged †	69	427	Carbon Steel ASTM A106 Gr. B	**401-SH**	69		●	●					ST-96
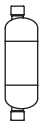	**Model 501-SH** Inverted Bucket Capacities to **430** kg/h		Screwed Socketweld Flanged †	106	454	316L Stainless Steel ASTM A312	**501-SH**	106		●	●					ST-96
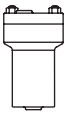	**Series 5000** Inverted Bucket Capacities to **2 340** kg/h		Socketweld Flanged †	★★ 146 ★★ 174	★★ 427	ASTM A182 F22 Forged Steel	**5133G** **5155G**	103 124		● 	● ●	● ●	● ●	 ●	 	 	ST-98
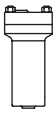	**Series 6000** Inverted Bucket Capacities to **2 950** kg/h		Socketweld Flanged †	★★ 241	★★ 454	ASTM A182 F22 Forged Steel	**6155G**	186				●	●			ST-100
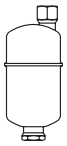	**Series 1000** Inverted Bucket Capacities to **2 000** kg/h		Screwed Socketweld Flanged †	28 28 45 31	427 427 316 427	304L Stainless Steel	**1010** **1011** **1022** **1013**	10,5 28 45 31		● ● 	● ● ● 	 ●	 	 	 	ST-104
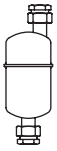	**Series U-1000** Inverted Bucket Capacities to **1 090** kg/h		Screwed Socketweld	28 28 31	260 260 260	304L Stainless Steel (optional strainer is carbon steel)	**U-1010** **U-1011** **U-1022**	10,5 28 31		● ● 	● ● ●	 	 	 	 	ST-104
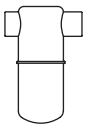	**Series 1800** Inverted Bucket Capacities to **1 090** kg/h		Screwed Socketweld Flanged †	28 45	427 315	304L Stainless Steel	**1810** **1811** **1822**	14 28 45	● 	● ● ●	 ● ●	 ●	 	 	 	ST-106
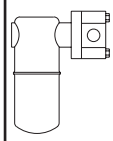	**Series 2000** Inverted Bucket Capacities to **590** kg/h		Screwed Socketweld Flanged †	28 45	427 315	304L Stainless Steel	**2010** **2011** **2022**	14 28 45		● ● ●	● ● ●	● ● ●	 	 	 	ST-108
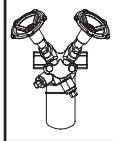	**TVS-4000** Trap Valve Station		Screwed Socketweld Flanged †	45	315	ASTM A351 Gr. CF8M	**TVS-4000**	45		●	●					ST-110
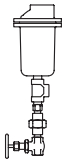	**Series 20-DC** Automatic Differential Controllers Capacities to **9 000** kg/h		Screwed Flanged †	17	232	ASTM A48 Class 30 Cast Iron	**21-DC** **22-DC** **23-DC** **24-DC** **25-DC** **26-DC**	17 17 17 17 17 17		● 	 ● 	 ● 	 ● 	 ● 	 ●	ST-114

★★ See tables on pages ST-98 and ST-100 for complete temperature/pressure rating information.
† Operating pressure and temperature may be limited depending on the class of flange selected.

Steam Trap ID Charts

Table ST-67-1. Armstrong Steam Traps

Illustration	Type	Flow Direction	Connection Type	Max. Allow. Press. barg	TMA °C	Body Material	Model	Max. Oper. Press. barg	Connection Size								Located on Page
									1/2"	3/4"	1"	1 1/4"	1 1/2"	2"	2 1/2"	3"	
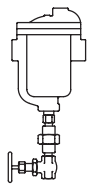	**Series 80-DC** Automatic Differential Controllers Capacities to **9 000** kg/h		Screwed Flanged †	17	232	ASTM A48 Class 30 Cast Iron	**81-DC** **82-DC** **83-DC** **84-DC** **85-DC** **86-DC**	17 17 17 17 17 17		● ●	●	●		● ●			ST-116
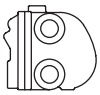	**Series B & BI** Float & Thermostatic Capacities to **4 040** kg/h		Screwed	8,5 12	178 192	ASTM A48 Class 30 Cast Iron	**B-2, BI-2** **B-3, BI-3** **B-4, BI-4** **B-5** **B-6** **B-8**	2 2 2 2 2 2	●▲	●▲ 	●▲	●	●	●			ST-120
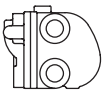	**Series A & AI** Float & Thermostatic Capacities to **3 900** kg/h		Screwed	12	192	ASTM A48 Class 30 Cast Iron	**AI-2** **A-3, AI-3** **A-4, AI-4** **A-5** **A-6** **A-8**	12 12 12 12 12 12	▲	●▲	●▲	●	●	●			ST-122
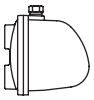	**Series J & K** Float & Thermostatic Capacities to **47 700** kg/h		Screwed Flanged †	12	232	ASTM A48 Class 30 Cast Iron	**J-8** **K-10**	12 3,5						●	●		ST-124
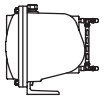	**Series L & M** Float & Thermostatic Capacities to **94 350** kg/h		Screwed Flanged †	17	232	ASTM A48 Class 30 Cast Iron	**L-8** **L-10** **M-12**	17 17 17						●	●	●	ST-126
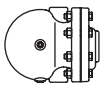	**Series CS** Float & Thermostatic Capacities to **6 030** kg/h		Screwed Socketweld Flanged †	41	343	Cast Steel	**CS-2** **CS-3** **CS-4** **CS-5** **CS-6** **CS-8**	32	●	●	●	●	●	●			ST-128
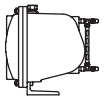	**Series LS & MS** Float & Thermostatic Capacities to **127 000** kg/h		Screwed Socketweld Flanged †	31	338	ASTM A216 WCB Carbon Steel	**LS-8** **LS-10** **MS-12**	31 31 31						●	●	●	ST-130
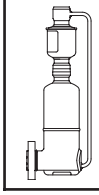	**Model F&T-2000** Float & Thermostatic Capacities to **600** kg/h		Screwed Socketweld Flanged †	25	350	304L Stainless Steel	**F&T-2000**	18	●	●	●						ST-132

▲ Series AI and BI for in-line connection.

† Operating pressure and temperature may be limited depending on the class of flange selected.

Steam Trap ID Charts

Table ST-68-1. Armstrong Steam Traps

Illustration	Type	Flow Direction	Connection Type	Max. Allow. Press. barg	TMA °C	Body Material	Model	Max. Oper. Press. barg	Connection Size				Located on Page
									3/8"	1/2"	3/4"	1"	
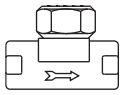	**Series CD-33** Controlled Disc Capacities to **1 130** kg/h		Screwed Flanged †	63	400	ASTM A743 Gr. CA40	**CD-33** **CD-33L**	41		● ●	● ●	●	ST-134
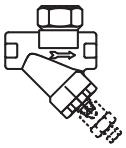	**Series CD-33S** Controlled Disc w/Integral Strainer Capacities to **1 130** kg/h						**CD-33S** **CD-33SL**			● ●	● ●	●	ST-134
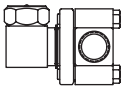	**Model CD-3300** Controlled Disc Capacities to **360** kg/h		Screwed Socketweld Flanged †	50	400	Stainless Steel	**CD-3300**	31		●	●	●	ST-137
	**Series CD-40** Controlled Disc Capacities to **1 300** kg/h		Screwed	41	260	Carbon Steel	**CD-41** **CD-42** **CD-43**	41 41 41	●	●	● 	 ●	ST-138
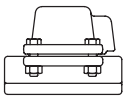	**Series CD-60** Controlled Disc Capacities to **1 300** kg/h		Screwed Socketweld Flanged †	41	399	Forged Carbon Steel	**CD-61** **CD-62** **CD-63**	41 41 41	●	●	 ●	 ●	ST-138
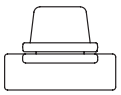	**Model CD-61-AB** Controlled Disc Capacities to **520** kg/h		Screwed Socketweld Flanged †	24	350	Carbon Steel	**CD-61-AB**	24		●	●	●	ST-139
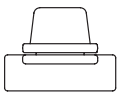	**Model AB** Bimetallic Capacities to **2 100** kg/h		Screwed Socketweld Flanged †	40	400	Carbon Steel	**AB**	22		●	●	●	ST-140
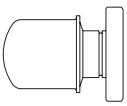	**Model AB-2000** Bimetallic Capacities to **2 100** kg/h		Screwed Socketweld Flanged †	28	343	304L Stainless Steel	**AB-2000**	22		●	●	●	ST-141
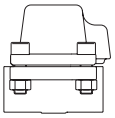	**Model AB-600** Bimetallic Capacities to **4 000** kg/h		Screwed Socketweld Flanged †	41	400	C 22.8	**AB-600**	41		●	●		ST-142
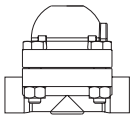	**Model SH-900** Bimetallic Capacities to **4 990** kg/h		Screwed Socketweld Flanged †	62	482	ASTM A351 Gr.CF8M	**SH-900**	L = 44* H = 62*		●	●	●	ST-143
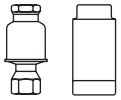	**Series WT** Thermostatic Wafer Cold Water Start-up Capacities to **730** kg/h		Screwed	28	343	304-L Stainless Steel	**WT-1**	28		●	●		ST-144
			Screwed Socketweld	41	399	C1018 Carbon Steel	**WT-3**	41		●	●		
			Screwed Socketweld Flanged †	28	343	304-L Stainless Steel	**WT-2000**	28		●	●	●	

† Operating pressure and temperature may be limited depending on the class of flange selected.

* L = Low Pressure; H = High Pressure

Steam Trap ID Charts

Table ST-69-1. Armstrong Steam Traps

Illustration	Type	Flow	Direction Type	Max. Allow. Press. barg	TMA °C	Body Material	Model	Max. Oper. Press. barg	Connection Size				Located on Page
									3/8"	1/2"	3/4"	1"	
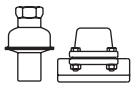	**Series MT** Thermostatic Wafer Cold Water Start-up Capacities to **450** kg/h		Screwed	17	204	304-L Stainless Steel	**WMT-1**	17	1/4" 3/8" ● ●	●			ST-146
			Screwed Socketweld Flanged †	40	400	Carbon Steel	**MT-2-AB**	17		●	●	●	
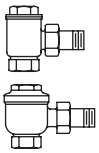	**Series TS** Thermostatic Bellows Capacities to **730** kg/h		Threaded	3,5	149	Bronze	**TS-2**	3,5		●	●		ST-147
				4,5	157		**TS-3**	4,5		●	●	●	
	**Series TT** Thermostatic Bellows Capacities to **1 570** kg/h	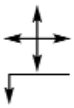	Screwed	20	232	304L Stainless Steel	**TTF-1**	20		●	●		ST-148
			Screwed Socketweld				**TTF-1R**			●	●		
			Screwed Socketweld Flanged †				**TT-2000**			●	●	●	
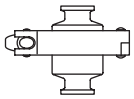	**Model TC-C** Thermostatic Clean Steam Clamp Capacities to **1 570** kg/h		Sanitary End	8,3	177	Stainless Steel 316L	**TC-C**	7		●	●	●	ST-150
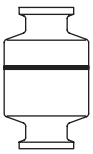	**Model TC-S** Thermostatic Clean Steam Sealed Capacities to **1 700** kg/h		Sanitary End	10	186	Stainless Steel 316L	**TC-S**	8,3		●	●	●	ST-150
			Threaded							●	●		
			Tube End							●	●		
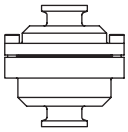	**Model TC-R** Thermostatic Clean Steam Bolted Capacities to **1 570** kg/h		Sanitary End	8,3	177	Stainless Steel 316L	**TC-R**	7		●	●	●	ST-150
			Threaded							●	●		
			Tube End							●	●		

† Operating pressure and temperature may be limited depending on the class of flange selected.
All models comply with the Pressure Equipment Directive PED 97/23/EC. For details, see specific product page or Armstrong PED Certificate.

The Inverted Bucket Steam Trap

Energy Efficient Because It's So Reliable

The inverted bucket is the most reliable steam trap operating principle known. The heart of its simple design is a unique leverage system that multiplies the force provided by the bucket to open the valve against pressure. Since the bucket is open at the bottom, it resists damage from water hammer, and wear points are heavily reinforced for long life.

The inverted bucket has only two moving parts – the valve lever assembly and the bucket. That means no fixed points, no complicated linkages. Nothing to stick, bind or clog.

Wear and corrosion resistance

Free-floating guided lever valve mechanism is "frictionless," and all wear points are heavily reinforced. All working parts are stainless steel. Valve and seat are stainless steel, individually ground and lapped together in matched sets.

Virtually no steam loss

Steam does not reach the water-sealed discharge valve.

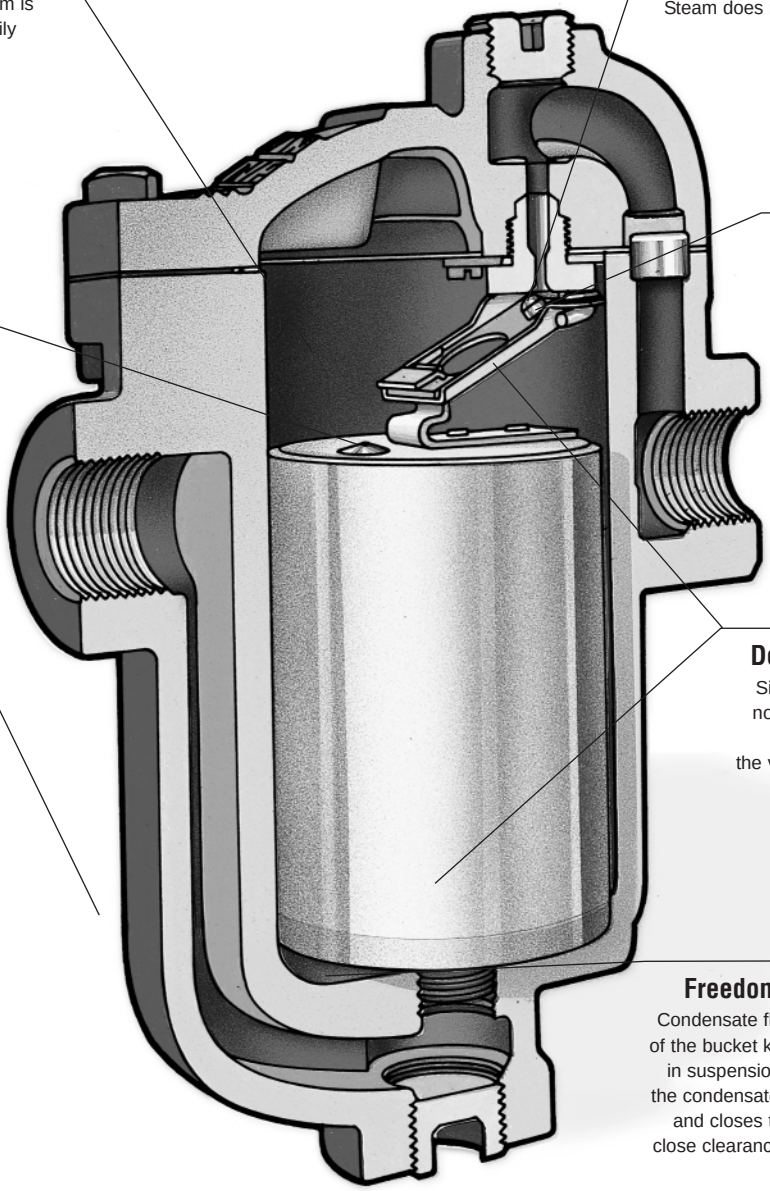

Purging action

Snap opening of the valve creates a momentary pressure drop and turbulence in the unit drained. This breaks up films of condensate and air and speeds their flow to the trap.

Continuous air and CO_2 venting

Vent in top of bucket provides continuous automatic air and CO_2 venting with no cooling lag or threat of air binding. Steam passing through vent is less than that required to compensate for radiation losses from the trap so it's not wasted.

Dependable operation

Simple, direct operation with nothing to stick, bind or clog. Only two moving parts – the valve lever and the bucket.

Excellent operation against back pressure

Since trap operation is governed by the difference in density of steam and water, back pressure in the return line has no effect on the ability of the trap to open for condensate and close against steam.

Freedom from dirt problems

Condensate flow under the bottom edge of the bucket keeps sediment and sludge in suspension until it is discharged with the condensate. Valve orifice opens wide and closes tightly. No buildup of dirt or close clearances to be affected by scale.

Resistance to damage from water hammer

Open bucket or float will not collapse as a result of water hammer.

Armstrong International SA • Parc Industriel des Hauts-Sarts (2e Avenue) • 4040 Herstal • Belgium
Tel.: +32 (0)4 240 90 90 • Fax: +32 (0)4 248 13 61
www.armstrong.be • marketing@armstrong.be

Inverted Bucket Steam Trap

Conserves Energy Even in the Presence of Wear
Armstrong inverted bucket steam traps open and close based on the difference in density between condensate and steam – the inverted bucket principle. They open and close gently, minimizing wear. This simple fact means that inverted buckets are subject to less wear than some other types of traps.

In fact, as an Armstrong inverted bucket trap wears, its tight seal actually improves. The ball valve and seat of the Armstrong trap provide essentially line contact – resulting in a tight seal because the entire closing force is concentrated on one narrow seating ring.

An Armstrong inverted bucket trap continues to operate efficiently with use. Gradual wear slightly increases the diameter of the seat and alters the shape and diameter of the ball valve. But, as this occurs, a tight seal is still preserved – the ball merely seats itself deeper.

Corrosion-Resistant Parts
The stainless steel valve and seat of the Armstrong inverted bucket steam trap are individually ground and lapped together in matched sets. All other working parts are wear- and corrosion-resistant stainless steel.

Venting of Air and CO_2
The Armstrong inverted bucket provides continuous automatic air and CO_2 venting with no cooling lag or threat of air binding.

Operation Against Back Pressure
The Armstrong inverted bucket has excellent performance against back pressure. It has no adverse effect on inverted bucket operation other than to reduce its capacity by the low differential. The bucket simply requires less force to pull the valve open and cycle the trap.

Freedom From Dirt Problems
Armstrong designed its inverted bucket to be virtually free of dirt problems. The valve and seat are at the top of the trap, far away from the larger particles of dirt, which fall to the bottom. Here the up-and-down action of the bucket pulverizes them. Since the valve of an inverted bucket is either fully closed or open, dirt particles pass freely. And the swift flow of condensate from under the bucket's edge creates a unique self-scrubbing action that sweeps dirt out of the trap.

Armstrong IB Valve Seating/Ball Valve

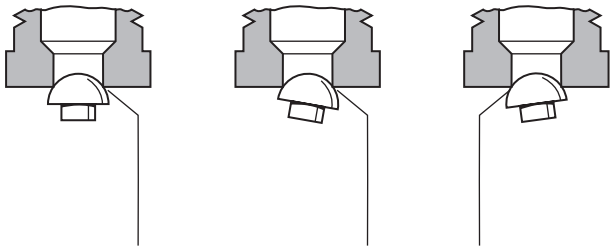

Line Contact – Single Seat

Infinite Number of Center Lines and Seating Circumferences

IB Valve Wear Characteristics

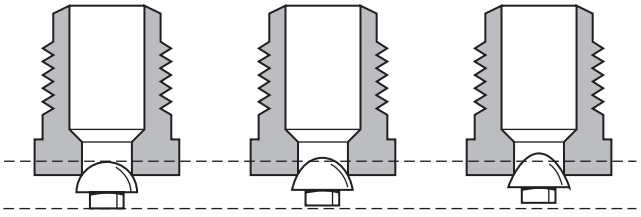

Armstrong IB ball valve continues to seat itself deeper, providing a tight seal even in the presence of wear.



All dimensions and weights are approximate. Use certified print for exact dimensions. Design and materials are subject to change without notice.

IB Steam Trap Summary Capacity Chart

Pressure difference in bar between steam line and return line with trap valve closed

Note: Above capacity chart does not include all models available. Refer to specific page of trap required for capacities not covered above.

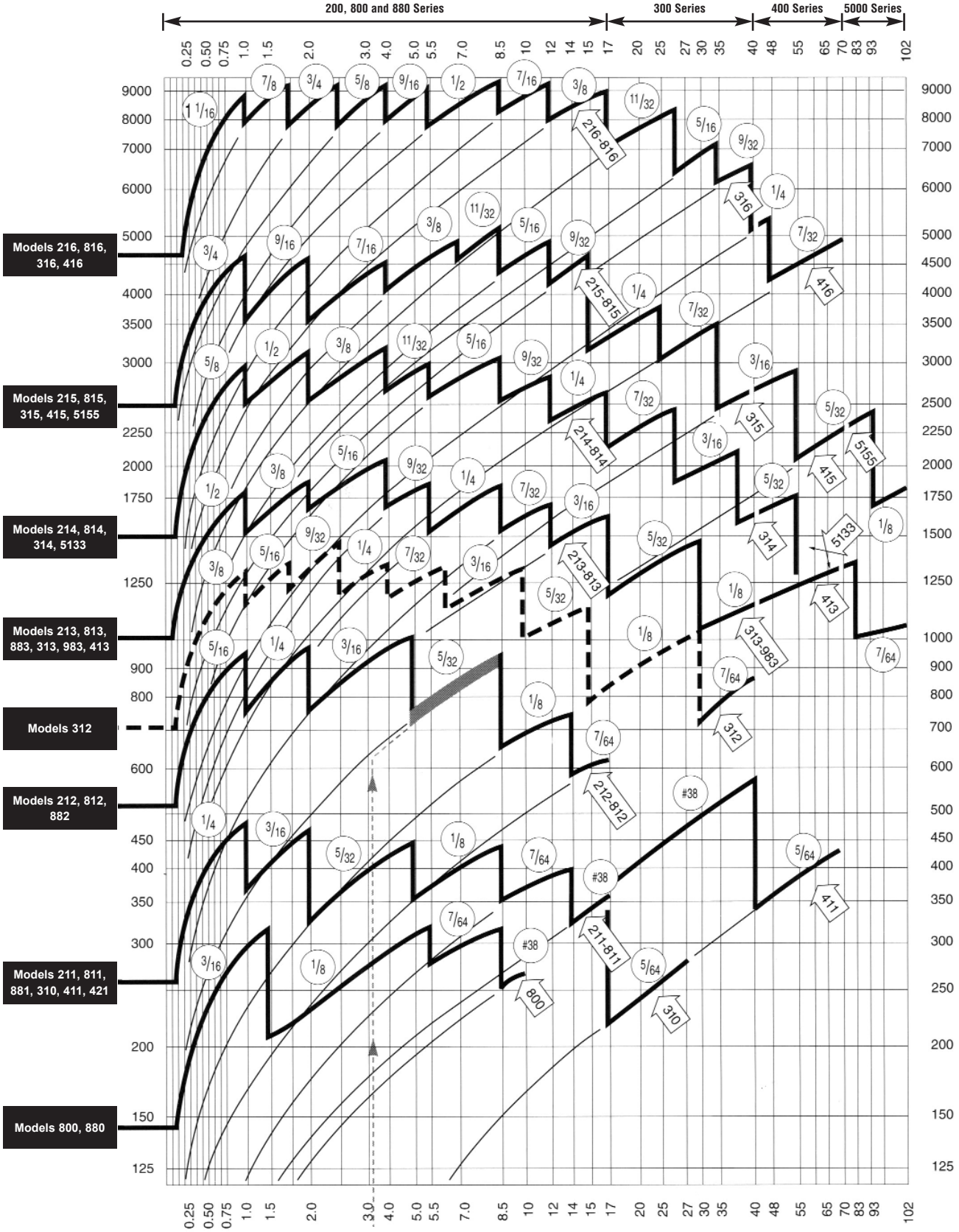

Pressure difference in bar between steam line and return line with trap valve closed

Note: Above capacity chart does not include all models available. Refer to specific page of trap required for capacities not covered above.

How to Use the IB Steam Trap Summary Capacity Chart

How the Capacity Chart was made

The Armstrong capacity chart shows continuous discharge capacities of Armstrong traps under actual operating conditions as determined by literally hundreds of tests. In these tests condensate at the steam temperature corresponding to the test pressure was used. The choking effect of flash steam through the orifice, as well as the back pressure created by flash steam, were automatically taken into account. Actual installation hookups were used so that pipe friction in both inlet and discharge lines also were reflected in the results.

Trap capacity ratings based on cold water tests which produce no flash steam would be much too high. Orifice tests also are too high because they ignore pipe friction. Theoretical calculations of trap capacities have never been conservative. You can rely on Armstrong capacity ratings because they show actual capacities of hot condensate.

Heavy "sawtooth" curves

show capacities for traps using maximum possible diameter orifices for the pressures shown.

Thin line curves

extending down to the left of the heavy curves show the capacities of Armstrong traps at pressures below their maximum ratings. For example: a model 216 trap with 1/2" orifice good for a maximum working pressure of 8,5 bar will have a continuous discharge capacity of a little less than 6 000 kg/h at 2,8 bar.

How to use the inverted bucket trap capacity chart

To select an inverted bucket steam trap using the Armstrong capacity chart, you must know the condensate load, safety factor and pressure differential. Remember, the objective is always to select a trap that can 1) operate at the maximum differential pressure and 2) handle the capacity at the minimum differential pressure. Consider the following typical problems:

Example 1:
Constant Pressure and Condensing Rate

Given:

Maximum pressure differential:	5 bar
Operating differential:	4 bar
Condensate load:	133 kg/h
times 3:1 safety factor or:	400 kg/h

Enter chart at 4 bar and go up to 400 kg/h capacity. This is directly on the 5/32" orifice line as shown in Chart ST-73-1. The capacity of this 5/32" orifice at pressures less than 2 bar is indicated by the thin line. Follow the line to the right to the vertical drop at 5 bar. This means this orifice will operate to a maximum of 5 bar differential - the other requirement for this application. Follow the heavy line back to the left and note that it's attached to the arrow indicating that the 211, 811 or 881 traps (1811 and 1011 are other possibilities) with the 5/32" orifice will yield this capacity. This is the trap to use.

Example 2:
Constant Pressure and Condensing Rate but with Possible High Back Pressure

Assume for example:

Maximum pressure differential:	6 bar
Operating differential minimum:	3 bar
Operating differential normally:	4 bar
Condensate load:	133 kg/h
times 3:1 safety factor or:	400 kg/h

To solve the problem, refer to the sawtooth chart, page ST-72. Enter at the minimum differential pressure (3 bar) and move up until you intersect a line that is above 400 kg/h capacity, which is the first thin line above the heavy "sawtooth" for the 211, 811 and 881 traps. Note that this is the continuation of the capacity line for the 5/32" orifice for the 212, 812 and 882 traps. Now follow the line to the right until the vertical drop at 8,5 bar differential. This is within our requirement of 6 bar. Therefore a 5/32" orifice can handle the 400 kg/h condensate load when fitted into a 212, 812 or 882 trap and that it will not lock shut at the 6 bar maximum differential. This is the trap to use since it will handle the load at both the minimum and maximum operating differentials, even though it has a maximum operating pressure differential of 8,5 bar.

Orifice sizes:

1 7/8"	= 47,0 mm	5/16"	= 7,9 mm
1 5/8"	= 41,0 mm	19/64"	= 7,5 mm
1 17/32"	= 39,0 mm	9/32"	= 7,1 mm
1 1/8"	= 28,0 mm	17/64"	= 6,7 mm
1 1/16"	= 27,0 mm	1/4"	= 6,4 mm
7/8"	= 22,2 mm	7/32"	= 5,6 mm
3/4"	= 19,0 mm	13/64"	= 5,1 mm
11/16"	= 17,5 mm	3/16"	= 4,8 mm
5/8"	= 15,9 mm	11/64"	= 4,4 mm
9/16"	= 14,3 mm	5/32"	= 4,0 mm
1/2"	= 12,7 mm	1/8"	= 3,2 mm
7/16"	= 11,2 mm	7/64"	= 2,8 mm
3/8"	= 9,5 mm	# 38	= 2,5 mm
11/32"	= 8,7 mm	5/64"	= 2,0 mm

Chart ST-73-1: Selection Curve Example 1

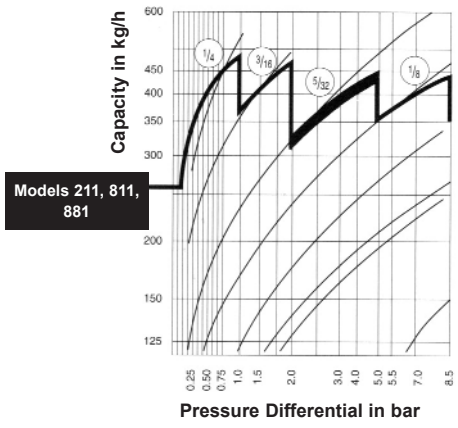

200 Series Inverted Bucket Steam Traps

Cast Iron for Vertical Installation

For Pressures to 17 bar...Capacities to 9 000 kg/h

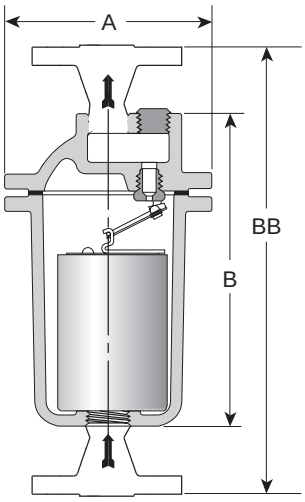



Description

The most reliable steam trap known – the inverted bucket – provides efficient condensate drainage of virtually all types of steam-using equipment. Put the inverted bucket to work in a tough cast iron package, and you have the best of both worlds. Because they operate efficiently for longer periods of time, Armstrong cast iron inverted buckets add solid energy savings to lower replacement/labor costs.

A unique leverage system multiplies the force provided by the bucket to open the valve against system pressure. The mechanism is free-floating, and has no fixed pivots to create wear or friction.

Because the mechanism is located at the top of the trap, no dirt can collect on the orifice. Small particles of dirt are held in suspension until discharged by the full differential purging action when the bucket sinks, pulling the valve off the seat.

The discharge orifice is surrounded by a water seal, preventing live steam loss. Automatic air venting is provided by a small vent hole in the bucket, which provides continuous automatic air and CO_2 venting at steam temperature.

Inverted bucket traps drain continuously, although discharging intermittently, allowing no condensate backup. They are also resistant to water hammer.

Maximum Operating Conditions

Maximum allowable pressure (vessel design):	17 bar @ 232°C
Maximum operating pressure:	17 bar
Maximum back pressure:	99% of inlet pressure

Connections

Screwed BSPT and NPT
Flanged DIN or ANSI (screw on)

Materials

Body:	ASTM A48 Class 30
Cap:	ASTM A48 Class 30 ASTM A-105 (Only 215 if PMO > 9 bar)
Internals:	All stainless steel – 304
Valve and seat:	Hardened chrome steel – 440F
Test plug:	Carbon steel

Options

- Stainless steel internal check valve
- Thermic vent bucket
- Scrub wire

Specification

Inverted bucket steam trap, type ... in cast iron, with continuous air venting at steam temperature, free floating stainless steel mechanism, and discharge orifice at the top of the trap. Maximum allowable back pressure 99% of inlet pressure.

How to Order

Specify:

- Model number
- Size and type of pipe connection
- Maximum working pressure that will be encountered or orifice size
- Any options required

Table ST-74-1. 200 Series, Bottom Inlet, Top Outlet Trap (dimensions in mm)
Add suffix "CV" to model number for internal check valve, "T" for thermic vent bucket.

Model No.	211	212	213	214	215	216
Pipe Connections	15	15 – 20	15 – 20 – 25	25 – 32	25 – 32 – 40	40 – 50
Test plug	1/8"	3/8"	1/2"	1/2"	3/4"	1"
"A" Flange Diameter	108	133	162	190	216	259
"B" Face-to-Face (screwed)	162	203	273	317	364	432
"BB" Face-to-Face (flanged PN40*)	282	320 - 330	390 - 400 - 392	436 - 440	484 - 494 - 494	562 - 568
Number of Bolts	6	8	6	8	8	12
Weight in kg (screwed)	2,7	5,2	9,2	15,0	20,3	35,2
Weight in kg (flanged PN40*)	4,1	7,0 – 7,6	11 – 11,6 – 12	18,6 – 20,2	21 – 22,7 – 23	39,6 – 41,2

* Other flange sizes, ratings and face-to-face dimensions are available on request.
Shade indicates products that are CE Marked according to the PED (97/23/EC). All the other models comply with the Article 3.3 of the same directive.

All dimensions and weights are approximate. Use certified print for exact dimensions. Design and materials are subject to change without notice.

Armstrong International SA • Parc Industriel des Hauts-Sarts (2e Avenue) • 4040 Herstal • Belgium
Tel.: +32 (0)4 240 90 90 • Fax: +32 (0)4 248 13 61
www.armstrong.be • marketing@armstrong.be

200 Series Inverted Bucket Steam Traps

Cast Iron for Vertical Installation

For Pressures to 17 bar...Capacities to 9 000 kg/h

Table ST-75-1. Model 211 Capacity

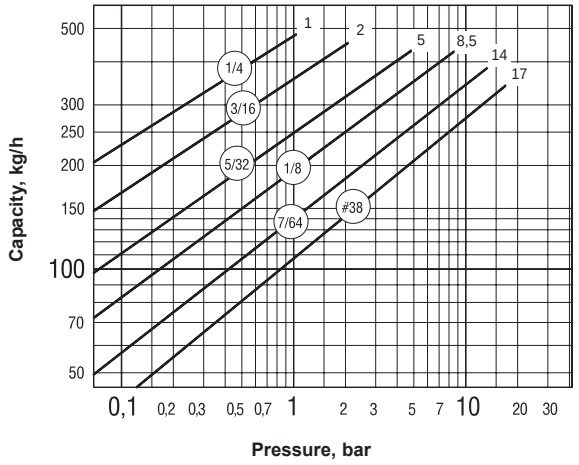

Table ST-75-2. Model 212 Capacity

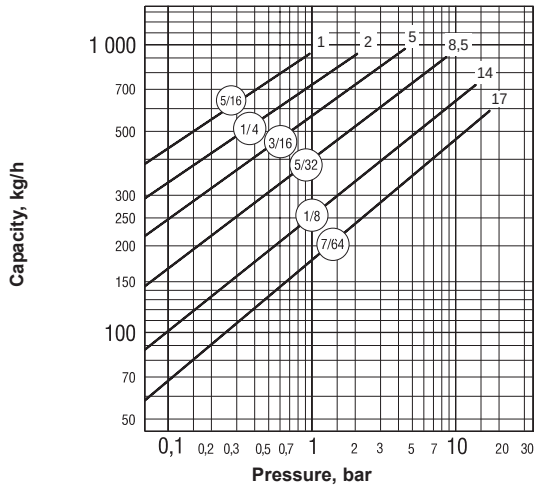

Table ST-75-3. Model 213 Capacity

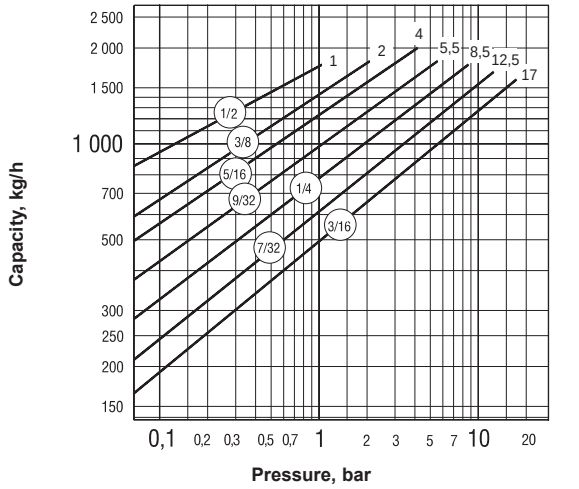

Table ST-75-4. Model 214 Capacity

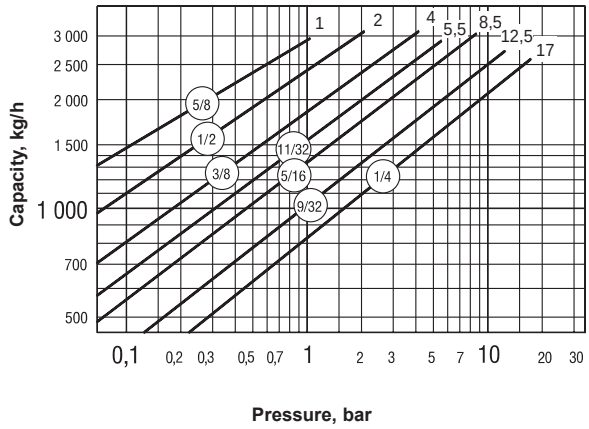

Table ST-75-5. Model 215 Capacity

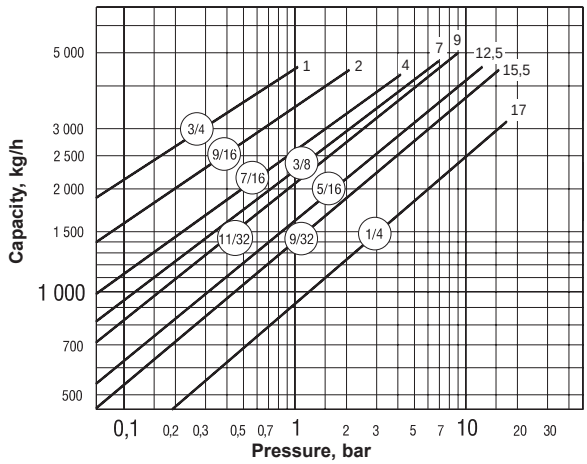

Table ST-75-6. Model 216 Capacity

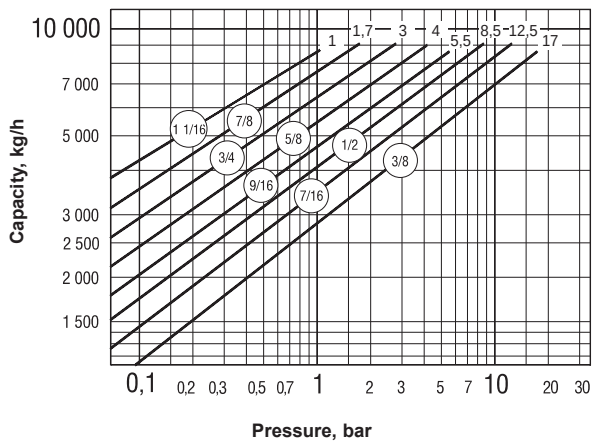

All dimensions and weights are approximate. Use certified print for exact dimensions. Design and materials are subject to change without notice.

Armstrong International SA • Parc Industriel des Hauts-Sarts (2e Avenue) • 4040 Herstal • Belgium
Tel.: +32 (0)4 240 90 90 • Fax: +32 (0)4 248 13 61
www.armstrong.be • marketing@armstrong.be

800-813 Series Inverted Bucket Steam Traps

Cast Iron for Horizontal Installation

For Pressures to 17 bar...Capacities to 2 000 kg/h

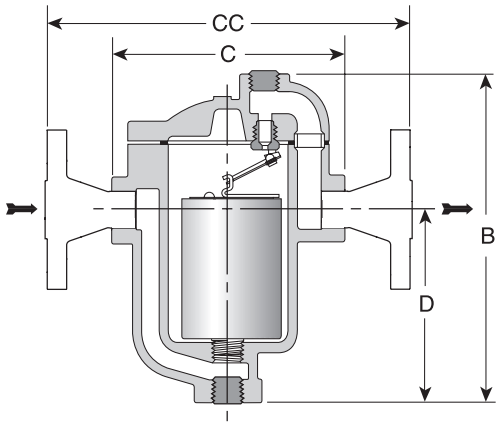



Description

The most reliable steam trap known – the inverted bucket – provides efficient condensate drainage of virtually all types of steam-using equipment. Put the inverted bucket to work in a tough cast iron package, and you have the best of both worlds. Because they operate efficiently for longer periods of time, Armstrong cast iron inverted buckets add solid energy savings to lower replacement/labor costs. All Armstrong cast iron inverted bucket steam traps are repairable for even bigger maintenance savings.

A unique leverage system multiplies the force provided by the bucket to open the valve against system pressure. The mechanism is free-floating, and has no fixed pivots to create wear or friction.

Because the mechanism is located at the top of the trap, no dirt can collect on the orifice. Small particles of dirt are held in suspension until discharged by the full differential purging action when the bucket sinks, pulling the valve off the seat.

The discharge orifice is surrounded by a water seal, preventing live steam loss. Automatic air venting is provided by a small vent hole in the bucket, which provides continuous automatic air and CO_2 venting at steam temperature.

Inverted bucket traps drain continuously, although discharging intermittently, allowing no condensate backup. They are also resistant to water hammer.

Maximum Operating Conditions

Maximum allowable pressure (vessel design):	17 bar @ 232°C
Maximum operating pressure:	Model 800: 10 bar Model 811-813: 17 bar
Maximum back pressure:	99% of inlet pressure

Connections

Screwed BSPT and NPT
Flanged DIN or ANSI (screw on)

Materials

Body:	ASTM A48 Class 30
Internals:	All stainless steel – 304
Valve and seat:	Hardened chrome steel – 440F
Test plug:	Carbon steel

Options

- Stainless steel internal check valve
- Thermic vent bucket
- Stainless steel pop drain
- Probe connection
- Thermo drain
- Scrub wire

Specification

Inverted bucket steam trap, type ... in cast iron, with continuous air venting at steam temperature, free-floating stainless steel mechanism, and discharge orifice at the top of the trap. Maximum allowable back pressure 99% of inlet pressure.

How to Order

Specify:

- Model number
- Size and type of pipe connection
- Maximum working pressure that will be encountered or orifice size
- Any options required

Table ST-76-1. 800-813 Series Side Inlet, Side Outlet Trap (dimensions in mm)
Add suffix "CV" to model number for internal check valve, "T" for thermic vent bucket.

Model No.	800*	811	812	813
Pipe Connections	15 – 20	15 – 20 – 25	15 – 20	20 – 25
Test plug	1/4"	1/4"	1/2"	3/4"
"B" Height	138	175	230	298
"C" Face-to-Face (screwed)	127	127	165	197
"CC" Face-to-Face (flanged PN40**)	195 – 191	195 – 191 – 197	233 – 229	261
"D" Bottom to ℄ Inlet	70	108	137	179
Number of Bolts	6			
Weight in kg (screwed)	2,3	2,7	6,8	12,5
Weight in kg (flanged PN40**)	3,6 – 4,3	4,1 – 4,3 – 4,8	8,2 – 9,0	14,3 – 14,8

* Cannot be furnished with both thermic vent bucket and check valve.

** Other flange sizes, ratings and face-to-face dimensions are available on request.

All models comply with the article 3.3 of the PED (97/23/EC).

All dimensions and weights are approximate. Use certified print for exact dimensions. Design and materials are subject to change without notice.

Armstrong International SA • Parc Industriel des Hauts-Sarts (2e Avenue) • 4040 Herstal • Belgium
Tel.: +32 (0)4 240 90 90 • Fax: +32 (0)4 248 13 61
www.armstrong.be • marketing@armstrong.be

800-813 Series Inverted Bucket Steam Traps

Cast Iron for Horizontal Installation

For Pressures to 17 bar...Capacities to 2 000 kg/h

Table ST-77-1. Model 800 Capacity

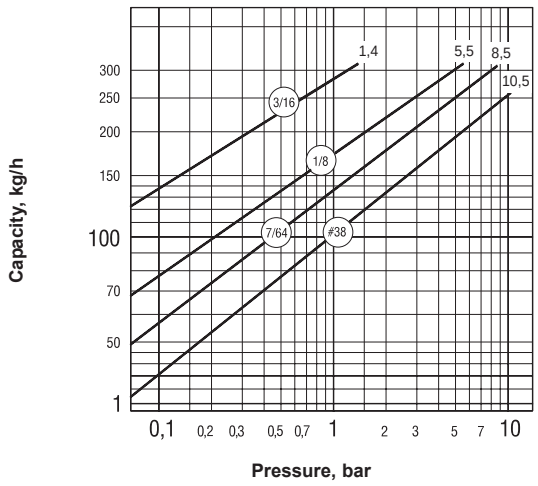

Table ST-77-2. Model 811 Capacity

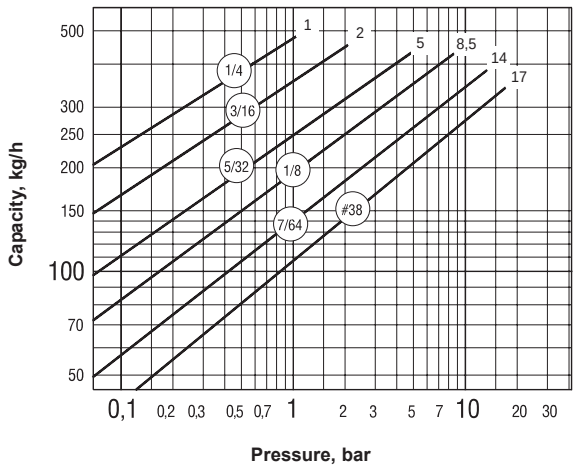

Table ST-77-3. Model 812 Capacity

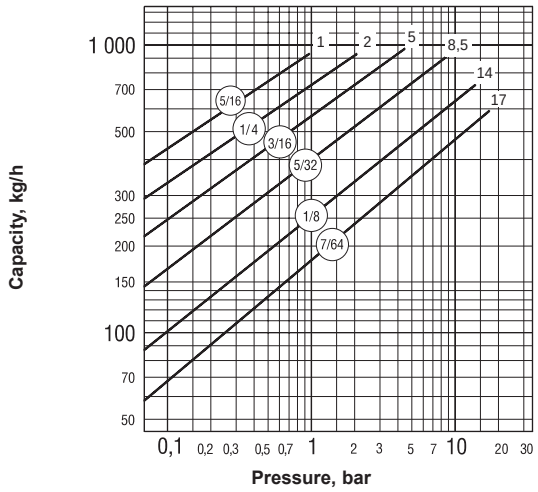

Table ST-77-4. Model 813 Capacity

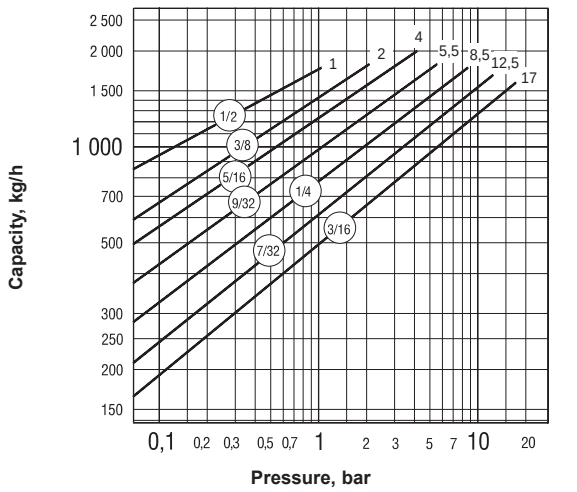

All dimensions and weights are approximate. Use certified print for exact dimensions. Design and materials are subject to change without notice.

814-816 Series Inverted Bucket Steam Traps

Cast Iron for Horizontal Installation

For Pressures to 17 bar...Capacities to 9 000 kg/h

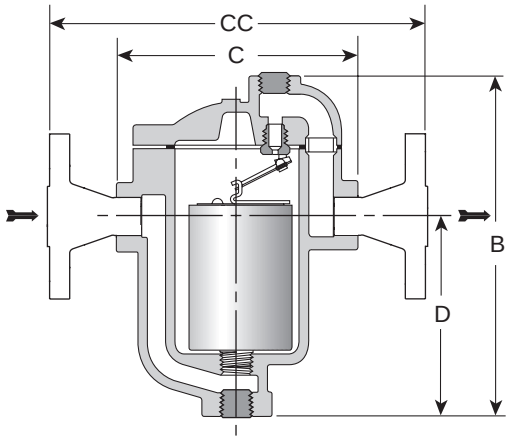



Description

The most reliable steam trap known – the inverted bucket – provides efficient condensate drainage of virtually all types of steam-using equipment. Put the inverted bucket to work in a tough cast iron package, and you have the best of both worlds. Because they operate efficiently for longer periods of time, Armstrong cast iron inverted buckets add solid energy savings to lower replacement/labor costs. All Armstrong cast iron inverted bucket steam traps are repairable for even bigger maintenance savings.

A unique leverage system multiplies the force provided by the bucket to open the valve against system pressure. The mechanism is free-floating, and has no fixed pivots to create wear or friction.

Because the mechanism is located at the top of the trap, no dirt can collect on the orifice. Small particles of dirt are held in suspension until discharged by the full differential purging action when the bucket sinks, pulling the valve off the seat.

The discharge orifice is surrounded by a water seal, preventing live steam loss. Automatic air venting is provided by a small vent hole in the bucket, which provides continuous automatic air and CO_2 venting at steam temperature.

Inverted bucket traps drain continuously, although discharging intermittently, allowing no condensate backup. They are also resistant to water hammer.

Maximum Operating Conditions

Maximum allowable pressure (vessel design):	17 bar @ 232°C
Maximum operating pressure:	17 bar
Maximum back pressure:	99% of inlet pressure

Connections

Screwed BSPT and NPT
Flanged DIN or ANSI (screw on)

Materials

Body:	ASTM A48 Class 30
Internals:	All stainless steel – 304
Valve and seat:	Hardened chrome steel – 440F
Test plug:	Carbon steel

Options

- Stainless steel internal check valve
- Thermic vent bucket
- Stainless steel pop drain
- Probe connection
- Thermo drain
- Scrub wire

Specification

Inverted bucket steam trap, type ... in cast iron, with continuous air venting at steam temperature, free-floating stainless steel mechanism, and discharge orifice at the top of the trap. Maximum allowable back pressure 99% of inlet pressure.

How to Order

Specify:

- Model number
- Size and type of pipe connection
- Maximum working pressure that will be encountered or orifice size
- Any options required

Table ST-78-1. 814-816 Series Side Inlet, Side Outlet Trap (dimensions in mm)
Add suffix "CV" to model number for internal check valve, "T" for thermic vent bucket.

Model No.	814	815	816
Pipe Connections	25 – 32	25 – 32 – 40 – 50	50 – 65
Test plug	1"	1 1/2"	2"
"B" Height	346	413	541
"C" Face-to-Face (screwed)	229	260	330
"CC" Face-to-Face (flanged PN40*)	293 – 355	382 – 386 – 392 – 398	468 – 480
"D" Bottom to ℄ Inlet	198	203	279
Number of Bolts	8		
Weight in kg (screwed)	20,0	32,2	59,4
Weight in kg (flanged PN40*)	23,0 – 24,6	34,6 – 36,2 – 36,6 – 38,2	65,4 – 68,2

* Other flange sizes, ratings and face-to-face dimensions are available on request.
All models are CE Marked according to the PED (97/23/EC), but PMA for 816 is 15 bar.

All dimensions and weights are approximate. Use certified print for exact dimensions. Design and materials are subject to change without notice.

Armstrong International SA • Parc Industriel des Hauts-Sarts (2e Avenue) • 4040 Herstal • Belgium
Tel.: +32 (0)4 240 90 90 • Fax: +32 (0)4 248 13 61
www.armstrong.be • marketing@armstrong.be

814-816 Series Inverted Bucket Steam Traps

Cast Iron for Horizontal Installation

For Pressures to 17 bar...Capacities to 9 000 kg/h

Table ST-79-1. Model 814 Capacity

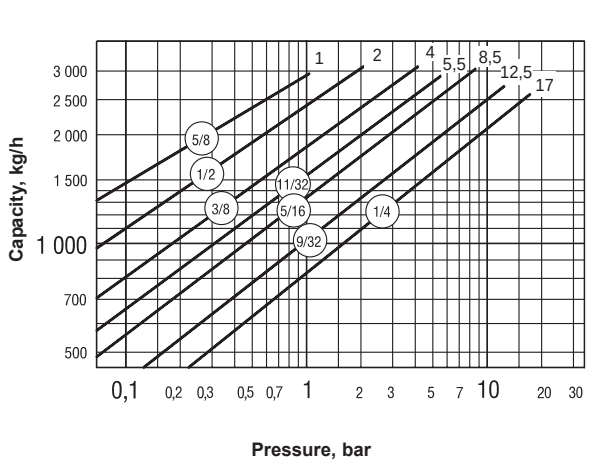

Table ST-79-2. Model 815 Capacity

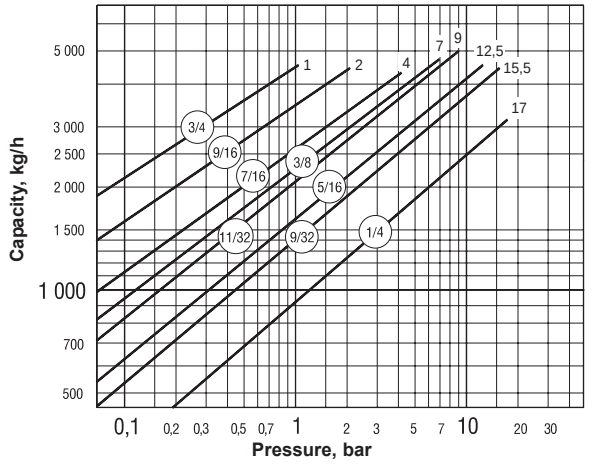

Table ST-79-3. Model 816 Capacity

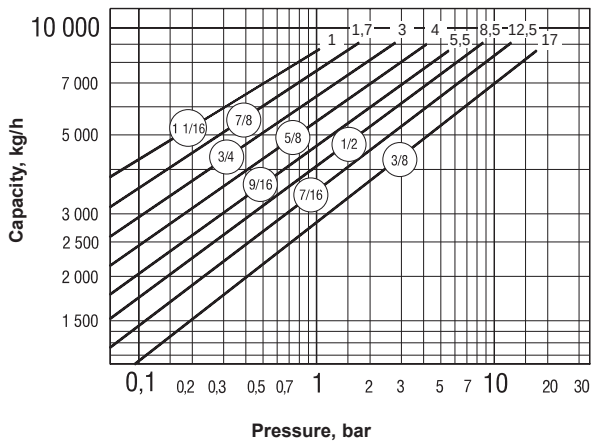

All dimensions and weights are approximate. Use certified print for exact dimensions. Design and materials are subject to change without notice.

880 Series Inverted Bucket Steam Traps

Cast Iron for Horizontal Installation, with Integral Strainer

For Pressures to 17 bar...Capacities to 2 000 kg/h

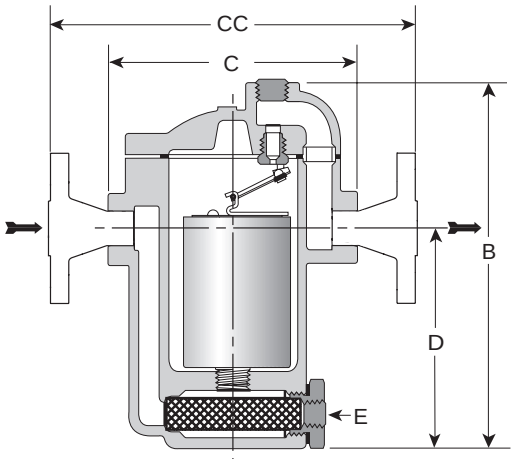



Description

The most reliable steam trap known – he inverted bucket – provides efficient condensate drainage of virtually all types of steam-using equipment. Put the inverted bucket to work in a tough cast iron package with an integral strainer, and you have the best of both worlds. Because they operate efficiently for longer periods of time, Armstrong cast iron inverted buckets add solid energy savings to lower replacement/labor costs. All Armstrong cast iron inverted bucket steam traps are repairable for even bigger maintenance savings.

A unique leverage system multiplies the force provided by the bucket to open the valve against system pressure. The mechanism is free-floating, and has no fixed pivots to create wear or friction.

Because the mechanism is located at the top of the trap, no dirt can collect on the orifice. Small particles of dirt are held in suspension until discharged by the full differential purging action when the bucket sinks, pulling the valve off the seat.

The discharge orifice is surrounded by a water seal, preventing live steam loss. Automatic air venting is provided by a small vent hole in the bucket, which provides continuous automatic air and CO_2 venting at steam temperature.

Inverted bucket traps drain continuously, although discharging intermittently, allowing no condensate backup. They are also resistant to water hammer.

Connections

Screwed BSPT and NPT
Flanged DIN or ANSI (screw on, except for model 881F – integral)

Maximum Operating Conditions

Maximum allowable pressure (vessel design):	17 bar @ 232°C 881F: 16 bar @ 120°C (PN16)
Maximum operating pressure:	Model 880: 10 bar Model 881 - 883: 17 bar
Maximum back pressure:	99% of inlet pressure

Materials

Body:	ASTM A48 Class 30
Internals:	All stainless steel – 304
Valve and seat:	Hardened chrome steel – 440F
Test plug:	Carbon steel
Strainer:	Stainless steel – 304

Options

- Stainless steel internal check valve
- Thermic vent bucket
- Scrub wire

Specification

Inverted bucket steam trap, type ... in cast iron with integral strainer, with continuous air venting at steam temperature, with free-floating stainless steel mechanism, and discharge orifice at the top of the trap. Maximum allowable back pressure 99% of inlet pressure.

How to Order

Specify:

- Model number
- Size and type of pipe connection
- Maximum working pressure that will be encountered or orifice size
- Any options required

Table ST-80-1. 880 Series Side Inlet, Side Outlet Trap with Integral Strainer (dimensions in mm)
Add suffix "CV" to model number for internal check valve, "T" for thermic vent bucket.

Model No.	880*	881 - 881F	882	883
Pipe Connections	15 – 20	15 – 20 – 25	15 – 20	20 – 25 – 32
Test plug	1/4"	1/4"	1/2"	3/4"
"B" Height	154	179	244	314
"C" Face-to-Face (screwed)	127	127	165	200
"CC" Face-to-Face (flanged PN40** - 881F PN16)	195 – 191	150 – 150 – 160	233 – 229	264 – 264 – 326
"D" Bottom to ℄ Inlet	87	113	146	187
"E" Blowdown Connection	3/8"	3/8"	3/8"	1/2"
Number of Bolts	6			
Weight in kg (screwed)	2,5	2,7	7	14,1
Weight in kg (flanged PN40** - 881F PN16)	4,0 – 4,6	3,8 – 4,2 – 4,6	8,8 – 9,4	15,6 – 16,1 – 17,7

* Cannot be furnished with both thermic vent bucket and check valve.
** Other flange sizes, ratings and face-to-face dimensions are available on request.
All models comply with the article 3.3 of the PED (97/23/EC).

All dimensions and weights are approximate. Use certified print for exact dimensions. Design and materials are subject to change without notice.

Armstrong International SA • Parc Industriel des Hauts-Sarts (2e Avenue) • 4040 Herstal • Belgium
Tel.: +32 (0)4 240 90 90 • Fax: +32 (0)4 248 13 61
www.armstrong.be • marketing@armstrong.be

880 Series Inverted Bucket Steam Traps

Cast Iron for Horizontal Installation, with Integral Strainer

For Pressures to 17 bar...Capacities to 2 000 kg/h

Table ST-81-1. Model 880 Capacity

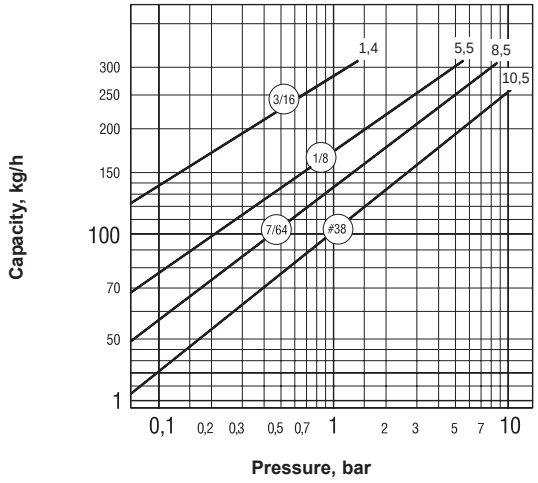

Table ST-81-2. Model 881 Capacity

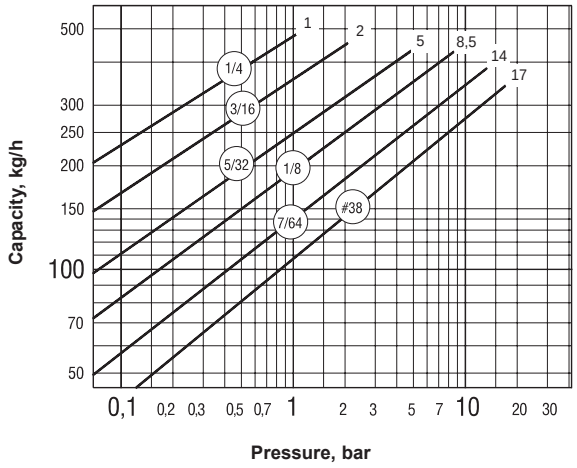

Table ST-81-3. Model 882 Capacity

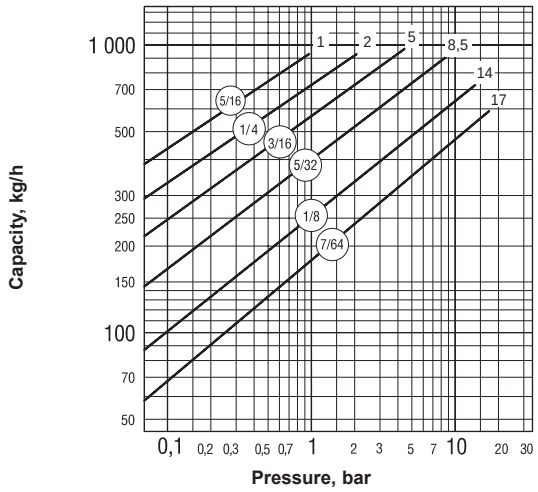

Table ST-81-4. Model 883 Capacity

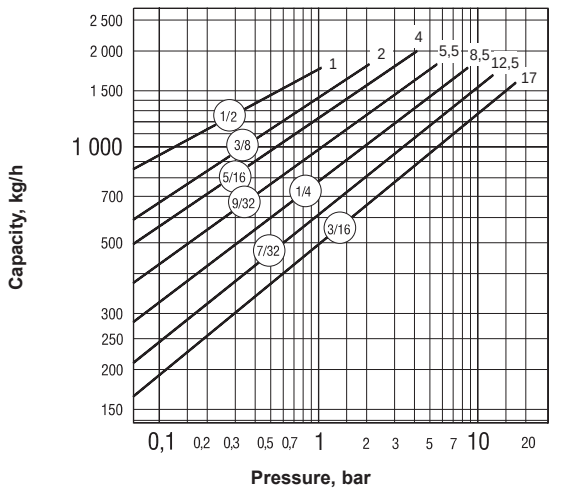

All dimensions and weights are approximate. Use certified print for exact dimensions. Design and materials are subject to change without notice.

TVS-800 Series Cast Iron Trap Valve Station

Put the principle of the inverted bucket to work in a tough cast iron package and you have the best of both worlds – energy efficiency and long-lasting reliability. Add the advantages of valves integrated into one compact trap/valve casting, and you extend the benefits into installation, trap testing and maintenance.

All the components are concentrated in a single, accessible package and can be dealt with in-line. And if you have existing Armstrong cast iron traps in-line, identical face-to-face dimensions will make retrofitting with a new, patented* Armstrong Trap Valve Station (TVS) a snap. You'll also reduce your inventory requirements. So you'll eliminate what you're paying just to keep parts on hand.

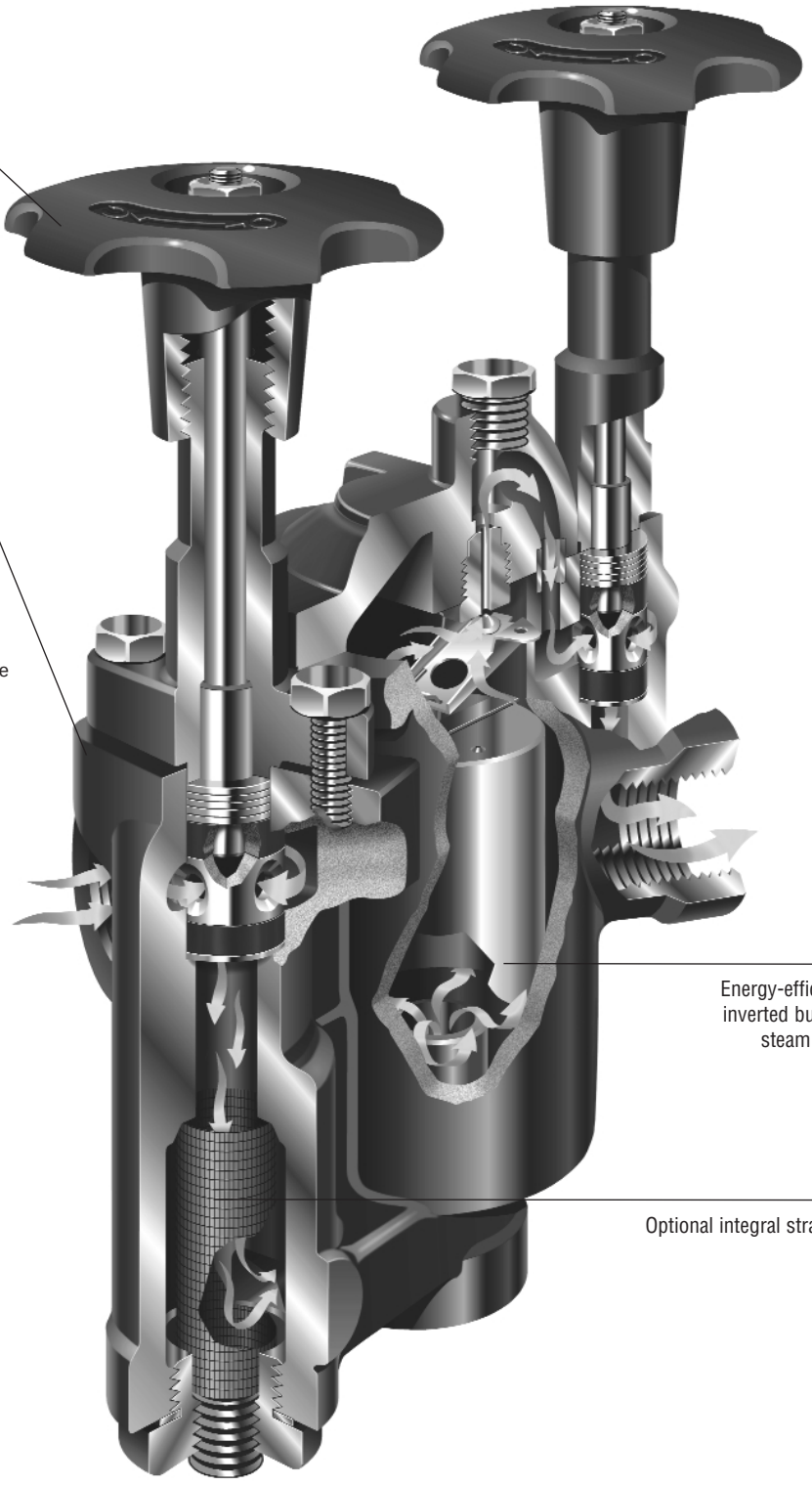

Reduced costs
TVS saves on these fronts: energy, installation and maintenance.

Integration of trap and valves
Inverted bucket long life and energy efficiency, plus the savings and convenience of components merged into one space-saving package.

A full range of options
TVS will accommodate a test valve, strainer, internal check valve, thermic vent bucket, TrapAlert™ and SteamEye™ – remote steam trap monitoring system for steam traps.

Easy, in-line repairability

Elimination of potential leak points

Reduced design time
Permits combining products with exact face-to-face dimensions.

*U.S. Patent 5 947 145

Armstrong International SA • Parc Industriel des Hauts-Sarts (2e Avenue) • 4040 Herstal • Belgium
Tel.: +32 (0)4 240 90 90 • Fax: +32 (0)4 248 13 61
www.armstrong.be • marketing@armstrong.be

TVS-800 Series Cast Iron Trap Valve Station

TVS makes a long story…short.

Typical Installation

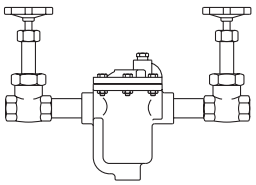

Inverted bucket trap with two isolation valves

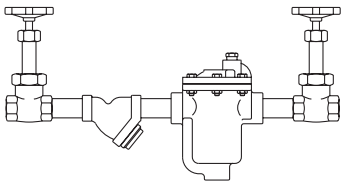

Inverted bucket trap with two isolation valves, strainer

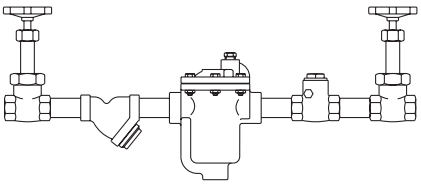

Inverted bucket trap with two isolation valves, strainer and check valve

Trap Valve Station

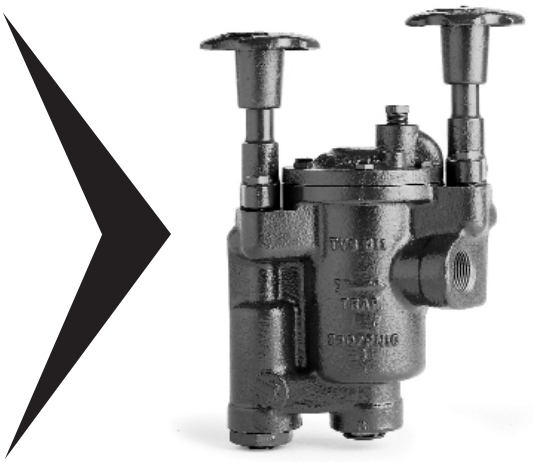

The Innovation Is Integration

The Armstrong TVS makes what used to be long, complicated steam installation stories simple and compact. It shortens installations by integrating components – specifically an inverted bucket steam trap with two or more valves.

For example, here's an old description for a typical installation: valve-nipple-strainer-nipple-trap-nipple-valve. It's a long tale, even for this simple piping arrangement. The Trap Valve Station rewrites this steam story: pipe-TVS-pipe. In other words, the TVS makes it all one, delivering the functions of multiple components in a dramatically smaller unit. It integrates two high-value products in a package of revolutionary versatility.

Look above to see how the Armstrong cast iron Trap Valve Station has rewritten these typical steam installations.

Average Service Life for Different Trap Types 14 bar Steam Pressure

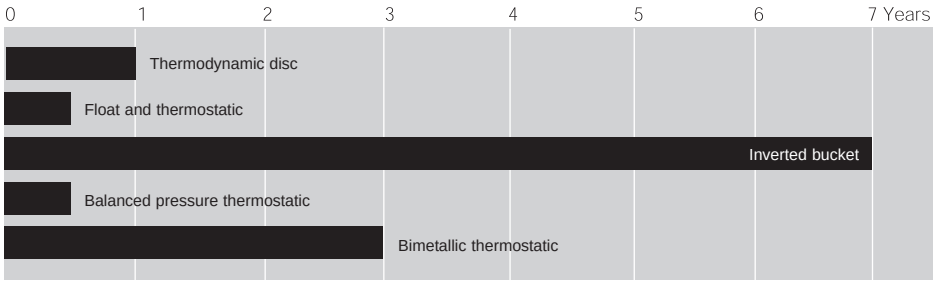

Above data from "ICI Engineer" January 1993 special issue with permission from ICI Engineering.

TVS-800 Series Trap Valve Stations

Cast Iron for Horizontal Installation, with Integral Piston Valves

For Pressures to 17 bar...Capacities to 2 000 kg/h

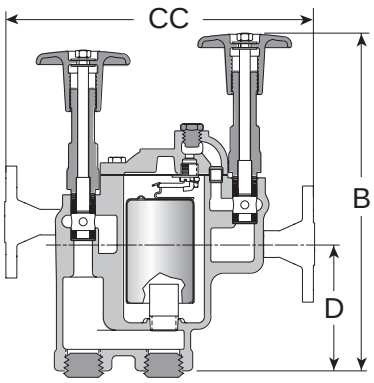

Model TVS-811

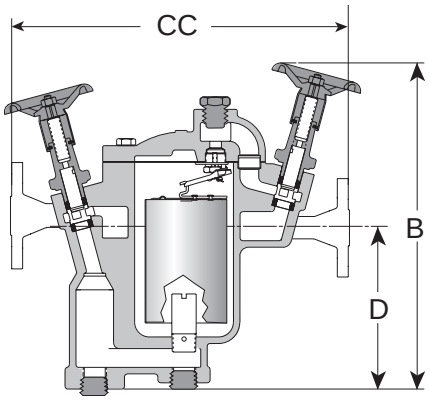

Series TVS-812/813

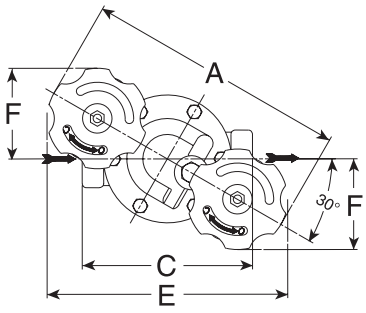

Series TVS-811/812/813 - Top View

Same principle. Different package. Now the energy-saving performance and reliability of the inverted bucket steam trap are available in a versatile new package.

You'll still enjoy all the familiar benefits. And the same efficient condensate drainage from virtually every kind of steam-using equipment. But what you'll find new are all the benefits of a piston valve integrated into the same space-saving package.

Maximum Operating Conditions

Maximum allowable pressure (vessel design):	17 bar @ 232°C
Maximum operating pressure:	17 bar
Maximum back pressure:	99% of inlet pressure

Connections

Screwed BSPT and NPT
Flanged DIN or ANSI (screw on)

Materials

Cap and Body:	ASTM A48 Class 30
Internals:	All stainless steel – 304
Valve and seat:	Hardened chrome steel – 440F
Piston Valve Handle :	Cast Iron ASTM A47
Internals:	Stainless Steel
Valve Sealing Rings:	Graphite and Stainless Steel
Blowdown valve:	Stainless Steel

Options

- Stainless steel internal check valve
- Thermic vent bucket
- Stainless steel pop drain
- Integral strainer
- Scrub wire
- Probe connection
- Blowdown valve (TVS-811 and TVS-812 only)

Specification

Inverted bucket steam trap, type ... in cast iron, with continuous air venting at steam temperature, free-floating stainless steel mechanism, and discharge orifice at the top of the trap. Integral upstream and downstream shutoff piston style valves in same dimensional space as standard bucket trap. Maximum allowable back pressure 99% of inlet pressure.

How to Order

Specify:

- Model number
- Size and type of pipe connection
- Maximum working pressure that will be encountered or orifice size
- Any options required

Table ST-84-1. TVS-800 Series Trap Valve Station (dimensions in mm)

Model No.	TVS-811	TVS-812	TVS-813
Pipe Connections	15 – 20	15 – 20	20 – 25
Test Plug	1/4"	1/2"	3/4"
"A" Width Across Handwheels	197	349	384
"B" Height Valve Open	254	298	362
"C" Face-to-Face (screwed)	127	165	197
"CC" Face-to-Face (flanged PN40*)	247 – 257	285 – 295	327 – 359
"D" Bottom to ℄ Inlet	94	121	184
"E" Width	179	330	365
"F"	68	114	124
Number of Bolts	6	6	6
Weight in kg (screwed)	5,4	11,3	24,0
Weight in kg (flanged PN40*)	6,8 – 7,0	12,7 – 13,5	25,8 – 26,3

* Other flange sizes, ratings and face-to-face dimensions are available on request.
All models comply with the article 3.3 of the PED (97/23/EC).

All dimensions and weights are approximate. Use certified print for exact dimensions. Design and materials are subject to change without notice.

Armstrong International SA • Parc Industriel des Hauts-Sarts (2e Avenue) • 4040 Herstal • Belgium
Tel.: +32 (0)4 240 90 90 • Fax: +32 (0)4 248 13 61
www.armstrong.be • marketing@armstrong.be

TVS-800 Series Trap Valve Stations

Cast Iron for Horizontal Installation, with Integral Piston Valves

For Pressures to 17 bar...Capacities to 2 000 kg/h

Table ST-85-1. Model TVS-811 Capacity

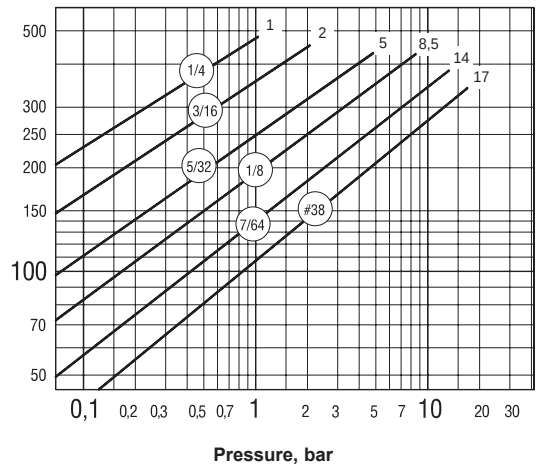

Table ST-85-2. Model TVS-812 Capacity

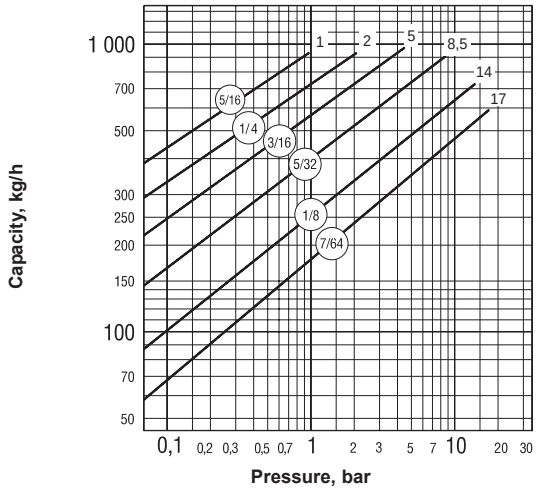

Table ST-85-3. Model TVS-813 Capacity

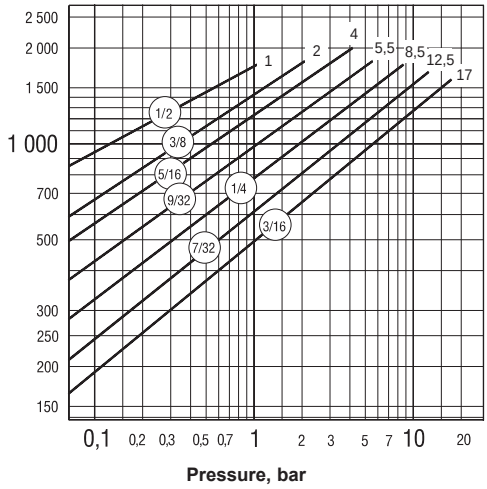

Options

Internal Check Valves are spring-loaded stainless steel and screw directly into the trap inlet or into an extended inlet tube having a pipe coupling at the top to save fittings, labor and money.

Thermic Vent Buckets have a bimetal controlled auxiliary air vent for discharging large amounts of air on start-up.

Integral Strainer is made from 20 x 20 stainless steel screen.

Probe Connections are available for trap monitoring.

Blowdown Valve for clearing strainer of dirt and debris.

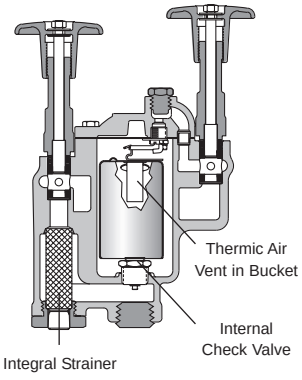

All dimensions and weights are approximate. Use certified print for exact dimensions. Design and materials are subject to change without notice.

980 Series Inverted Bucket Steam Traps

Cast Steel for Horizontal Installation, with Integral Strainer

For Pressures to 41 bar...Capacities to 2 000 kg/h

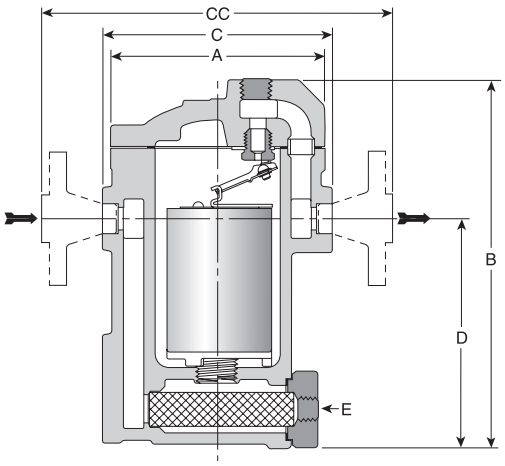



Description

Armstrong offers two sizes of cast steel traps with in-line horizontal pipe connections and integral strainers with a choice of screwed, socketweld or flanged connections.

A unique leverage system multiplies the force provided by the bucket to open the valve against system pressure. The mechanism is free-floating, and has no fixed pivots to create wear or friction.

Because the mechanism is located at the top of the trap, no dirt can collect on the orifice. Small particles of dirt are held in suspension until discharged by the full differential purging action when the bucket sinks, pulling the valve off the seat.

The discharge orifice is surrounded by a water seal, preventing live steam loss. Automatic air venting is provided by a small vent hole in the bucket, which provides continuous automatic air and CO_2 venting at steam temperature.

Inverted bucket traps drain continuously, although discharging intermittently, allowing no condensate backup. They are also resistant to water hammer.

Maximum Operating Conditions

Maximum allowable pressure (vessel design):	41 bar @ 343°C
Maximum operating pressure:	41 bar
Maximum back pressure:	99% of inlet pressure

Connections

Screwed BSPT and NPT
Socketweld
Flanged DIN or ANSI (welded)

Materials

Body:	ASTM A216 WCB
Internals:	All stainless steel – 304
Valve and seat:	Hardened chrome steel – 440F (<38 bar) Titanium (>38 bar)
Strainer:	Stainless steel – 304
Test plug:	Carbon steel

Options

- Stainless steel internal check valve
- Thermic vent bucket 17 bar maximum
- Scrub wire

Specification

Inverted bucket steam trap, type ... in cast steel, with continuous air venting at steam temperature, free-floating stainless steel mechanism, integral strainer, and discharge orifice at the top of the trap. Maximum allowable back pressure 99% of inlet pressure.

How to Order

Specify:

- Model number
- Size and type of pipe connection. When flanges are required, specify type of flange in detail
- Maximum working pressure that will be encountered or orifice size
- Any options required

Table ST-86-1. 980 Series Side Inlet, Side Outlet Trap with Integral Strainer (dimensions in mm)

Model No.	981	983
Pipe Connections	15 – 20	20 – 25
Test plug	1/2"	3/4"
"A" Flange Diameter	114	184
"B" Height	219	313
"C" Face-to-Face (screwed & SW)	137	197
"CC" Face-to-Face (flanged PN40*)	196 – 194	282
"D" Bottom to ℄ Inlet	122	193
"E" Blowdown Connection	3/8"	3/4"
Weight in kg (screwed & SW)	5,2	19,5
Weight in kg (flanged PN40*)	7,0	26,0

* Other flange sizes, ratings and face-to-face dimensions are available on request.
Shade indicates products that are CE Marked according to the PED (97/23/EC). All the other models comply with the Article 3.3 of the same directive.

All dimensions and weights are approximate. Use certified print for exact dimensions. Design and materials are subject to change without notice.

Armstrong International SA • Parc Industriel des Hauts-Sarts (2e Avenue) • 4040 Herstal • Belgium
Tel.: +32 (0)4 240 90 90 • Fax: +32 (0)4 248 13 61
www.armstrong.be • marketing@armstrong.be

980 Series Inverted Bucket Steam Traps

Cast Steel for Horizontal Installation, with Integral Strainer

For Pressures to 41 bar...Capacities to 2 000 kg/h

Table ST-87-1. Model 981 Capacity

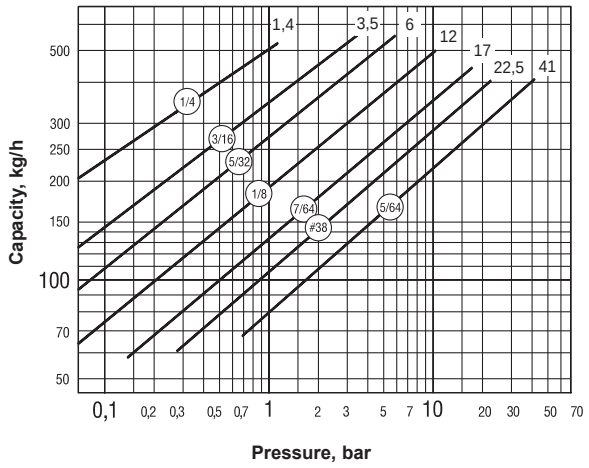

Table ST-87-2. Model 983 Capacity

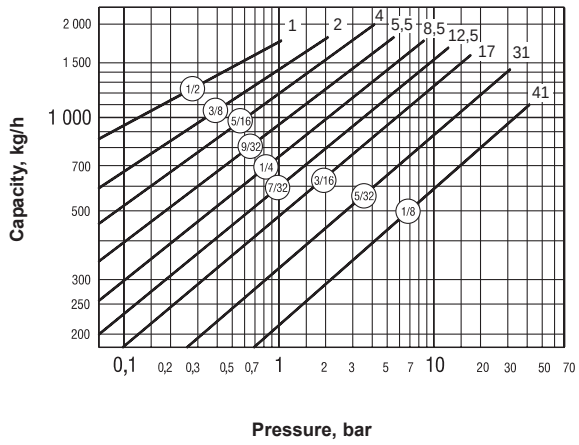

All dimensions and weights are approximate. Use certified print for exact dimensions. Design and materials are subject to change without notice.

EM Inverted Bucket Steam Trap

Forged Carbon Steel for Horizontal Installation

For Pressures to 32 bar… Capacities to 480 kg/h

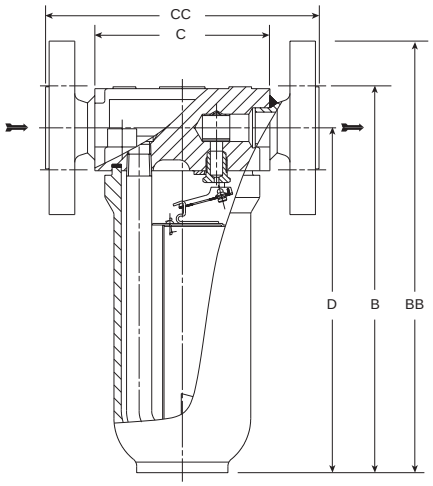



Description

Armstrong's type EM forged steel inverted bucket steam trap combines the most reliable steam trap operating principle known in a body, which can be opened for Easy Maintenance.

- High resistance to wear, corrosion and water hammer.
- The free-floating guided lever valve mechanism is “frictionless” with all wear points heavily reinforced. All working parts are stainless steel; valve and seat are hardened chrome steel, individually ground and lapped.
- Freedom from dirt problems. Condensate flow under bottom edge of bucket keeps sediment and “sludge” in suspension until discharged by full differential purging action. Valve orifice opens wide - closes tight. There is no buildup of dirt, no close clearances to be affected by scale. Under normal conditions of reasonably “clean steam”, a strainer is not necessary. However, this is left to the user's discretion.
- Air handling ability. Vent in bucket top provides continuous automatic air and CO_2 venting with no cooling leg and prevents air binding. Wiggle wire ensures clean vent hole at all times. Any steam passing through vent is condensed and discharged as liquid.
- No steam loss. Steam does not reach the water-sealed valve.
- Inverted bucket traps require no adjustment and no live steam to operate.

Maximum operating conditions

Maximum allowable pressure (vessel design):	32 bar - 250°C
Maximum operating pressure:	32 bar
Maximum back pressure:	99% of inlet pressure

Connections

Screwed BSPT and NPT
Socketweld
Flanged DIN or ANSI (welded)

Materials

Body:	Forged carbon steel
Internals:	All stainless steel – 304
Valve and seat:	Hardened chrome steel – 440F
Gasket:	Spiral wounded graphite
Bolts:	24 CrMo5

Options

- Bucket vent scrubbing wire for heavy dirt/oil conditions
- Probe connection (3/8") for use of TrapAlert™, the self-diagnostic steam traps
- For superheated steam we advise stellited valve and seat

Specification

Inverted bucket steam trap, type EM in forged steel, with automatic air vent, free-floating lever mechanism, with the orifice in the top. Maximum allowable back pressure 99% of inlet pressure.

How to order

Specify:

- Size and type of pipe connection
- Maximum working pressure that will be encountered or orifice size
- Maximum condensate load
- Any options required

Table ST-88-1. Model EM Side Inlet, Side Outlet Trap (dimensions in mm)

Pipe Connections	15	20	25
“C” Face-to-Face (screwed & SW)	98	98	–
“CC” Face-to-Face (flanged PN40*)	150	150	160
“D” Bottom to ℄ Inlet	189	189	189
“B” Height (screwed & SW)	210	210	–
“BB” Height (flanged PN40*)	235	240	245
Weight in kg (screwed & SW)	3,1	3,1	–
Weight in kg (flanged PN40*)	5,5	7,1	8,1

* Other flange sizes, ratings and face-to-face dimensions are available on request.
All sizes comply with the article 3.3 of the PED (97/23/EC).

All dimensions and weights are approximate. Use certified print for exact dimensions. Design and materials are subject to change without notice.

Armstrong International SA • Parc Industriel des Hauts-Sarts (2e Avenue) • 4040 Herstal • Belgium
Tel.: +32 (0)4 240 90 90 • Fax: +32 (0)4 248 13 61
www.armstrong.be • marketing@armstrong.be

EM Inverted Bucket Steam Trap

Forged Carbon Steel for Horizontal Installation

For Pressures to 32 bar… Capacities to 480 kg/h

Table ST-89-1. Model EM Capacity

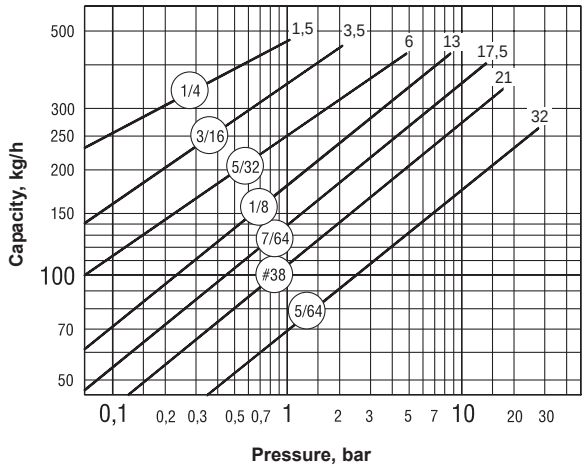

All dimensions and weights are approximate. Use certified print for exact dimensions. Design and materials are subject to change without notice.

300 Series Inverted Bucket Steam Traps

Forged Carbon Steel for Vertical Installation

For Pressures to 45 bar...Capacities to 9 000 kg/h

Description

Armstrong offers its 300 Series forged carbon steel traps for vertical installation with a choice of screwed, socketweld or flanged connections.

A unique leverage system multiplies the force provided by the bucket to open the valve against system pressure. The mechanism is free-floating, and has no fixed pivots to create wear or friction.

Because the mechanism is located at the top of the trap, no dirt can collect on the orifice. Small particles of dirt are held in suspension until discharged by the full differential purging action when the bucket sinks, pulling the valve off the seat.

The discharge orifice is surrounded by a water seal, preventing live steam loss. Automatic air venting is provided by a small vent hole in the bucket, which provides continuous automatic air and CO_2 venting at steam temperature.

Inverted bucket traps drain continuously, allowing no condensate backup. They are also resistant to water hammer.

For Superheat Service:

1. Don't oversize the orifice; a restricted orifice may be advisable.
2. Specify a burnished valve and seat and an extended inlet tube and check valve.
3. Provide a drip leg of adequate diameter and length.
4. Provide a generous length (600-900 mm) of inlet piping, with the trap below the main.
5. Don't insulate the trap or the inlet piping.

Connections

Screwed BSPT and NPT
Socketweld
Flanged DIN or ANSI (welded)

Materials

Body:	ASTM A105 Models 312, 313, 316 are also available with cast 316 stainless steel bodies and all stainless steel internals
Internals:	All stainless steel – 304 (larger sizes have cast iron bucket weights)
Valve and seat:	Hardened chrome steel – 440F (<38 bar) Titanium (>38 bar)

Options

- Stainless steel internal check valve
- Thermic vent bucket 17 bar maximum
- Scrub wire

Specification

Inverted bucket steam trap, type ... in forged carbon steel, with continuous air venting at steam temperature, free-floating stainless steel mechanism, and discharge orifice at the top of the trap. Maximum allowable back pressure 99% of inlet pressure.

How to Order

Specify:

- Model number
- Size and type of pipe connection. When flanges are required, specify type of flange in detail
- Maximum working pressure that will be encountered or orifice size
- Any options required

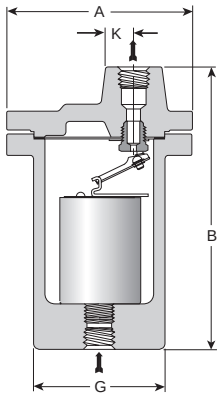

Model 300 Trap

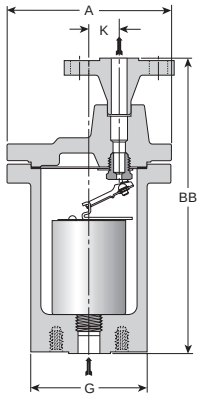

Series 300 FW Trap

Table ST-90-1. Pressure-Temperature Rating for Forged Steel Traps

Model No.	Maximum Oper. Pr., Saturated Steam	Maximum Allowable Pressure (Vessel Design) of Pressure - Containing Parts at Indicated Temperature			
		-28°C / +343°C	371°C	399°C	427°C
	bar	bar			
310	27,5	53	**53**	50	41
312	41,5	41	**41**	38,5	34,5
313	45	74	**74**	67	54
314	45	**78**	77	68	56
315	45	**70**	66,5	59	47,5
316	45	**76**	72	65	52

Notes: Maximum operating pressure to be marked on nameplate will be determined by actual orifice used.
Maximum allowable pressures shown in boldface will be marked on nameplate, unless otherwise requested.
Traps with flanges may have different pressure-temperature ratings.
Maximum back pressure is 99% of inlet pressure.

Table ST-90-2. 300 Series Bottom Inlet, Top Outlet Trap (dimensions in mm)
Add suffix "CV" to trap number for internal check valve.

Model No. Screwed or SW Model No. Flanged	310 310-FW	312 312-FW	313 313-FW	314 314-FW	315 315-FW	316 316-FW
Pipe Connections	15 – 20	15 – 20 – 25	15 – 20 – 25	25 – 32	25 – 32 – 40	40 – 50
"A" Flange Diameter	114	171	203	219	248	302
"B" Face-to-Face (screwed & SW)	202	259	295	348	381	435
"BB" Face-to-Face (flanged PN100*)	282 – 287	307 – 314 – 320	343 – 349 – 355	409 – 411	442 – 444 – 446	499 – 505
"G" Body Outside Diameter	78	121	130	146	168	213
"K" ℄ Outlet to ℄ Inlet	14,3	31,7	36,5	36,5	44,4	54,0
Number of Bolts	6	6	8		9	
Weight in kg (screwed & SW)	4,5	13,6	22,0	31,8	44,5	81,2
Weight in kg (flanged PN100*)	5,5 – 6,5	14,5 – 15,5 – 16	22,5 – 23,5 – 24	36,5 – 37,0	45,5 – 47,5 – 49	85,8 – 87,8

* Other flange sizes, ratings and face-to-face dimensions are available on request.
Shade indicates products that are CE Marked according to the PED (97/23/EC). All the other models comply with the Article 3.3 of the same directive.

All dimensions and weights are approximate. Use certified print for exact dimensions. Design and materials are subject to change without notice.

Armstrong International SA • Parc Industriel des Hauts-Sarts (2e Avenue) • 4040 Herstal • Belgium
Tel.: +32 (0)4 240 90 90 • Fax: +32 (0)4 248 13 61
www.armstrong.be • marketing@armstrong.be

300 Series Inverted Bucket Steam Traps

Forged Carbon Steel for Vertical Installation

For Pressures to 45 bar...Capacities to 9 000 kg/h

Table ST-91-1. Model 310 Capacity

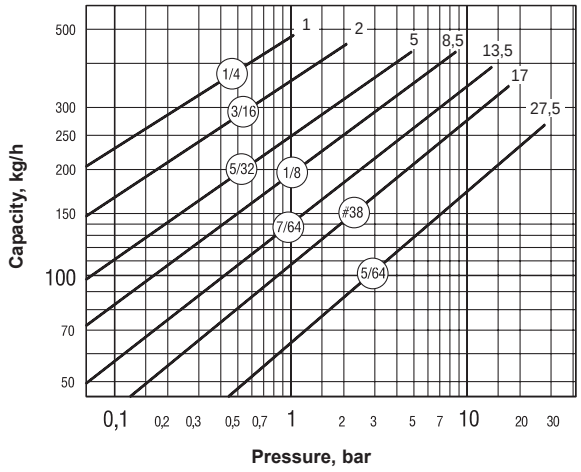

Table ST-91-2. Model 312 Capacity

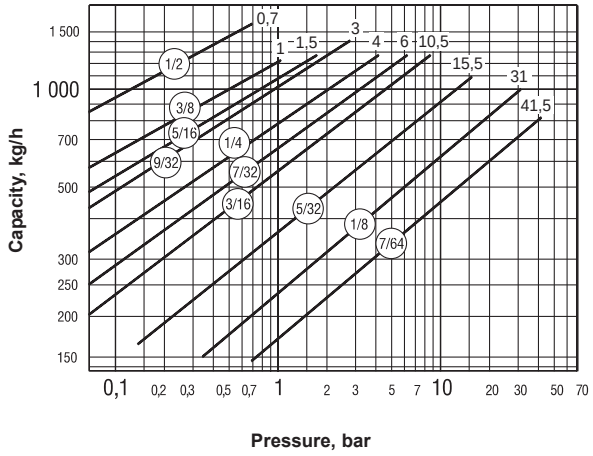

Table ST-91-3. Model 313 Capacity

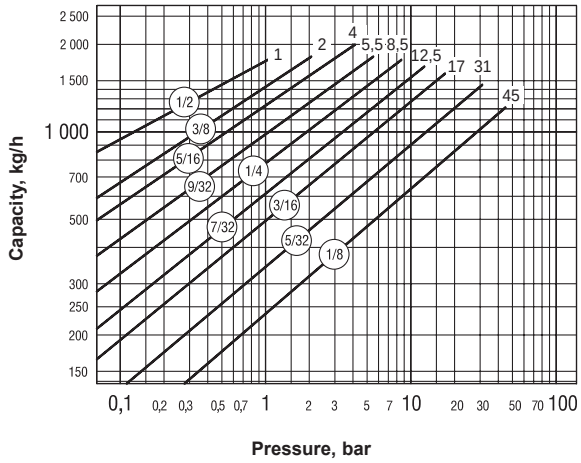

Table ST-91-4. Model 314 Capacity

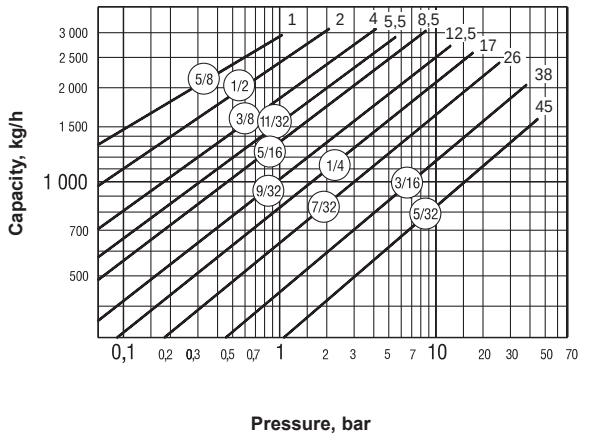

Table ST-91-5. Model 315 Capacity

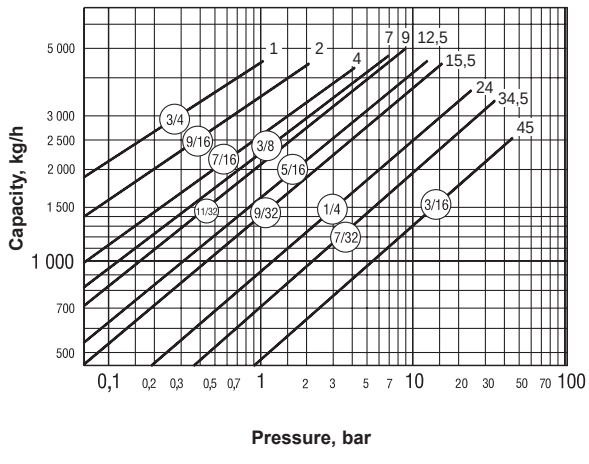

Table ST-91-6. Model 316 Capacity

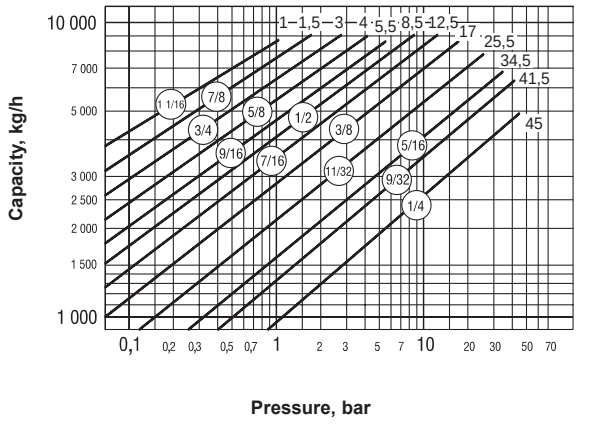

All dimensions and weights are approximate. Use certified print for exact dimensions. Design and materials are subject to change without notice.

411G/421 Inverted Bucket Steam Traps

Forged Carbon Steel for Vertical and Horizontal Installation

For Pressures to 69 bar...Capacities to 590 kg/h

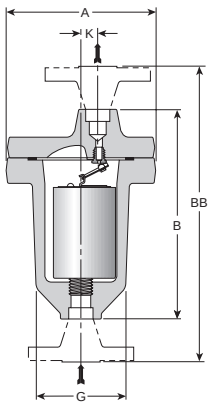

Model 411G Trap

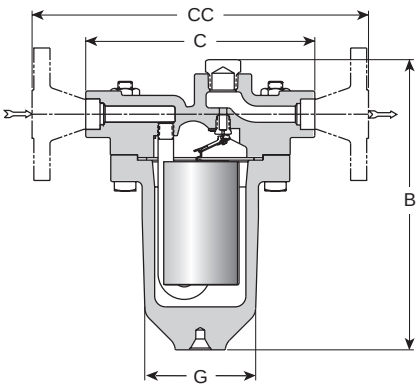

Model 421 Trap



Description

Armstrong Model 411G vertical installation and Model 421 horizontal installation offer smaller capacities at higher pressures.

A unique leverage system multiplies the force provided by the bucket to open the valve against system pressure. The mechanism is free-floating and has no fixed pivots to create wear or friction.

Because the mechanism is located at the top of the trap, no dirt can collect on the orifice. Small particles of dirt are held in suspension until discharged by the full differential purging action when the bucket sinks, pulling the valve off the seat.

The discharge orifice is surrounded by a water seal, preventing live steam loss. Automatic air venting is provided by a small vent hole in the bucket.

Inverted bucket traps drain continuously to prevent condensate backup. They are also resistant to water hammer.

Model 421 adds the convenience and savings of in-line repairability and is designed to meet today's energy management requirements efficiently and economically over a long, trouble-free service life.

Connections

Screwed BSPT and NPT
Socketweld
Flanged DIN or ANSI (welded)

Materials

Body:	ASTM A105
411G Cap:	ASTM A105
421 Cap:	ASTM A216 WCB
Internals:	All stainless steel – 304
Valve and seat:	Titanium

Options

Stainless steel internal check valve (411G only)

Specifications

Inverted bucket steam trap, type ... in forged carbon steel, with continuous air venting at steam temperature, free-floating stainless steel mechanism, with the discharge orifice at the top of the trap. Maximum allowable back pressure 99% of inlet pressure.

How to Order

Specify:

- Model number
- Size and type of pipe connection. When flanges are required, specify type of flange in detail
- Maximum working pressure that will be encountered or orifice size
- Any options required

Table ST-92-1. Model 411G Bottom Inlet, Top Outlet Trap; Model 421 Side Inlet, Side Outlet Trap (dimensions in mm)
Add suffix "CV" to trap number for internal check valve.

Model No. Screwed or SW Model No. Flanged	411G 411G-FW	421 421-FW
Pipe Connections	15 – 20	15 – 20
"A" Flange Diameter	160	–
"B" & "C" Face-to-Face (screwed & SW)	224	203
"BB" & "CC" Face-to-Face (flanged PN100*)	298 – 304	277 – 283
"G" Body Outside Diameter	103	98
"K" ℄ Outlet to ℄ Inlet	19	–
Number of Bolts	8	8
Weight in kg (screwed & SW)	11,3	12,6
Weight in kg (flanged PN100*)	14,4 – 15,4	15,1 – 16,1

* Other flange sizes, ratings and face-to-face dimensions are available on request.
All models comply with the article 3.3 of the PED (97/23/EC).

All dimensions and weights are approximate. Use certified print for exact dimensions. Design and materials are subject to change without notice.

Armstrong International SA • Parc Industriel des Hauts-Sarts (2e Avenue) • 4040 Herstal • Belgium
Tel.: +32 (0)4 240 90 90 • Fax: +32 (0)4 248 13 61
www.armstrong.be • marketing@armstrong.be

411G/421 Inverted Bucket Steam Traps

Forged Carbon Steel for Vertical and Horizontal Installation

For Pressures to 69 bar...Capacities to 590 kg/h

Table ST-93-1. Model 411G and 421 Capacity

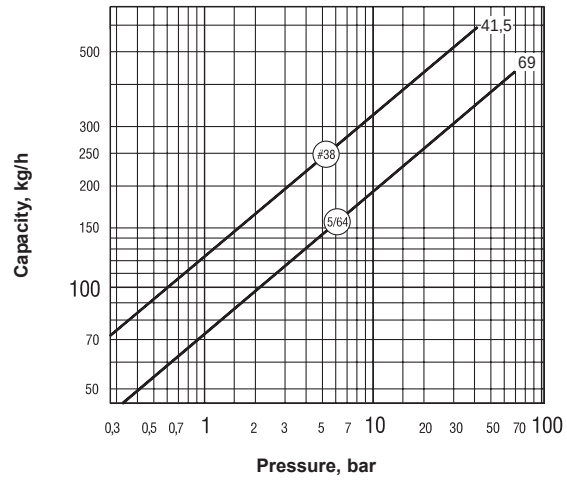

Note: #38 orifice in Model 421 is limited to 39 bar.

Table ST-93-2. Pressure-Temperature Rating for Forged Steel Traps

Model No.	Maximum Operating Pressure, Saturated Steam	Max. Allowable Pressure (Vessel Design) of Pressure-Containing Parts at Indicated Temp.		
		-21 / +371°C	399°C	427°C
	bar	bar		
411G / 421	69	**69**	65,5	58

Notes: Maximum operating pressure to be marked on nameplate will be determined by actual orifice used.
Maximum allowable pressures shown in boldface will be marked on nameplate, unless otherwise requested.
Traps with flanges may have different pressure-temperature ratings.
Maximum back pressure is 99% of inlet pressure.

All dimensions and weights are approximate. Use certified print for exact dimensions. Design and materials are subject to change without notice.

400 Series Inverted Bucket Steam Traps

Forged Chrome-moly Steel for Vertical Installation

For Pressures to 69 bar...Capacities to 9 000 kg/h

Description

Armstrong offers its 400 Series forged chrome-moly steel traps for vertical installation with a choice of screwed, socketweld or flanged connections.

A unique leverage system multiplies the force provided by the bucket to open the valve against system pressure. The mechanism is free-floating and has no fixed pivots to create wear or friction.

Because the mechanism is located at the top of the trap, no dirt can collect on the orifice. Small particles of dirt are held in suspension until discharged by the full differential purging action when the bucket sinks, pulling the valve off the seat.

The discharge orifice is surrounded by a water seal, preventing live steam loss. Automatic air venting is provided by a small vent hole in the bucket. This provides continuous automatic air and CO_2 venting at steam temperature.

Inverted bucket traps drain continuously to prevent condensate backup. They are also resistant to water hammer.

Operation on Superheat. A normally operating bucket trap is filled with saturated steam and condensate. Superheated steam can enter only as fast as the steam inside can condense. As a result, the temperature of the trap is at (or slightly below) saturated steam temperature, regardless of the degree of superheat.

Trap Selection. The pressure-containing parts of the steam trap should safely withstand the maximum pressure and temperature conditions of the system. For example, a trap is required for a 62 bar main at 482°C. The normal operating temperature of the trap will be about 278°C. A Model 415 trap should be selected, even though several smaller traps are capable of handling the working pressure.

For Superheat Service:

1. Don't oversize the orifice; a restricted orifice may be advisable.
2. Specify a burnished valve and seat and an extended inlet tube and check valve.
3. Provide a drip leg of adequate diameter and length.
4. Provide a generous length (600-900 mm) of inlet piping, with the trap below the main.
5. Don't insulate the trap or the inlet piping.

Connections

Screwed BSPT and NPT
Socketweld
Flanged DIN or ANSI (welded)

Materials

Body:	ASTM A182 F22 Class 3 Models 413 and 415 are available with cast 316 stainless steel bodies and all stainless steel internals
Internals:	All stainless steel – 304
Valve and seat:	Hardened chrome steel – 440F (<38 bar) Titanium (>38 bar)

Options

Stainless steel internal check valve

Specification

Inverted bucket steam trap, type ... in forged chrome-moly steel, with continuous air venting at steam temperature, free-floating stainless steel mechanism, with the discharge orifice at the top of the trap. Maximum allowable back pressure 99% of inlet pressure.

How to Order

Specify:

- Model number
- Size and type of pipe connection. When flanges are required, specify type of flange in detail
- Maximum working pressure that will be encountered or orifice size
- Any options required

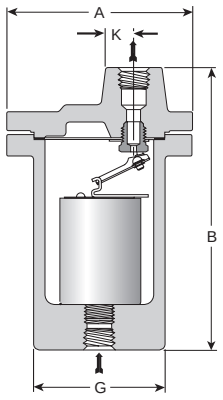

Model 400 Trap

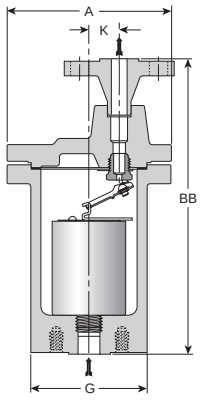

Series 400 FW Trap

Table ST-94-1. 400 Series Bottom Inlet, Top Outlet Trap (dimensions in mm)
Add suffix "CV" to trap number for internal check valve.

Model No. Screwed or SW Model No. Flanged	413 413-FW	415 415-FW	416 416-FW
Pipe Connections	15 – 20 – 25	25 – 32 – 40	40 – 50
"A" Flange Diameter	219	273	317
"B" Face-to-Face (screwed & SW)	305	379	448
"BB" Face-to-Face (flanged PN100*)	353 – 360 – 366	440 – 444 – 446	513 – 519
"G" Body Outside Diameter	137	175	216
"K" ℄ Outlet to ℄ Inlet	36,5	44,4	54
Number of Bolts	8	9	12
Weight in kg (screwed & SW)	29,5	57,2	88,0
Weight in kg (flanged PN100*)	31,5 – 32,5 – 33,0	58,0 – 60,0 – 61,5	92,5 – 94,5

* Other flange sizes, ratings and face-to-face dimensions are available on request.
All models are CE Marked according to the PED (97/23/EC).

All dimensions and weights are approximate. Use certified print for exact dimensions. Design and materials are subject to change without notice.

Armstrong International SA • Parc Industriel des Hauts-Sarts (2e Avenue) • 4040 Herstal • Belgium
Tel.: +32 (0)4 240 90 90 • Fax: +32 (0)4 248 13 61
www.armstrong.be • marketing@armstrong.be

400 Series Inverted Bucket Steam Traps

Forged Chrome-moly Steel for Vertical Installation

For Pressures to 69 bar...Capacities to 9 000 kg/h

Table ST-95-1. Model 413 Capacity

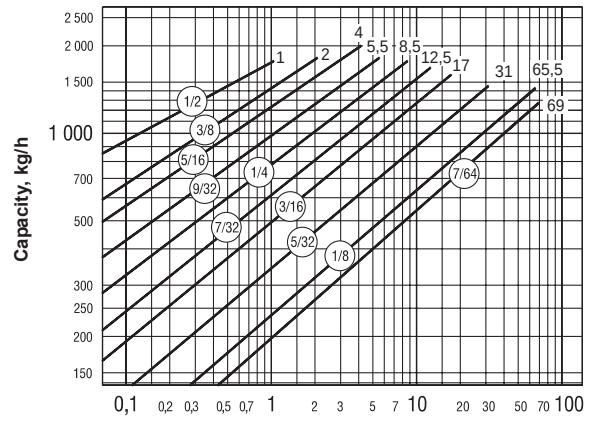

Table ST-95-2. Model 415 Capacity

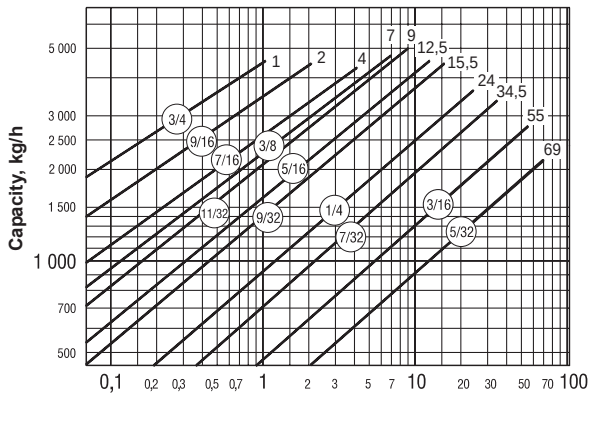

Table ST-95-3. Model 416 Capacity

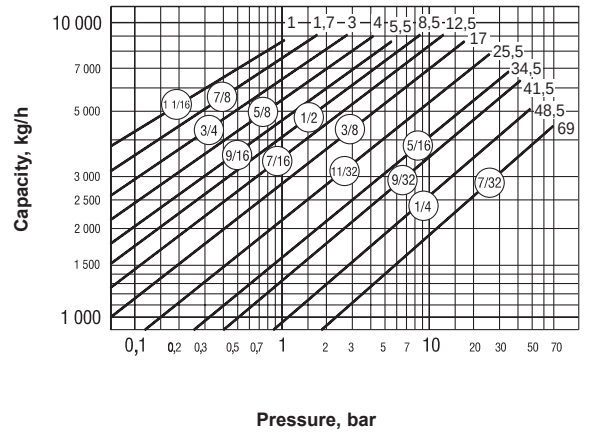

Table ST-95-4. Pressure-Temperature Rating for Forged Steel Traps

Model No.	Maximum Operating Pressure, Saturated Steam	Max. Allowable Pressure (Vessel Design) of Pressure-Containing Parts at Indicated Temp.			
		-28 / +399°C	427°C	454°C	482°C
	bar	bar			
413	69	83	**83**	72	54
415	69	76	**76**	74,5	66,5
416	69	**117**	114	93	68

Notes: Maximum operating pressure to be marked on nameplate will be determined by actual orifice used.
Maximum allowable pressures shown in boldface will be marked on nameplate, unless otherwise requested.
Traps with flanges may have different pressure-temperature ratings.
Maximum back pressure is 99% of inlet pressure.

All dimensions and weights are approximate. Use certified print for exact dimensions. Design and materials are subject to change without notice.

401-SH/501-SH Inverted Bucket Superheated Steam Traps

Carbon Steel or Stainless Steel for Vertical Installation

For Pressures to 106 bar...Capacities to 430 kg/h

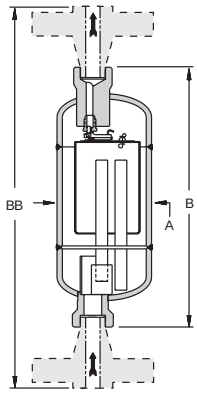

Model 401-SH

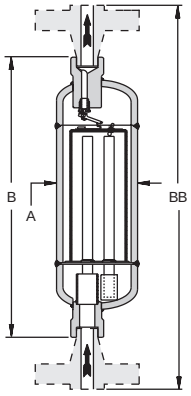

Model 501-SH



Description

Armstrong's 401-SH/501-SH Series inverted bucket steam trap line **is made for overcoming the difficult combination of superheat and high pressure/low load service.**

To survive this most severe steam service, Armstrong created an inverted bucket trap with a unique accumulation chamber. The chamber collects sufficient condensate to ensure full discharge cycles. A cup in the chamber floats up and down on the steam inlet tube, sealing it off as the condensate level rises. At the same time as the chamber collects condensate, steam continues to flow under the bucket, making sure that the discharge valve closes tightly until the condensate rises into the trap body and the bucket falls down. The operation is on/off, no throttling or dribbling.

Furthermore, it combines all the advantages of an inverted bucket steam trap:

- High resistance to wear, corrosion and water hammer with **no gaskets.**
- A unique leverage system multiplies the force provided by the bucket, to open the valve against system pressure.
- The mechanism is located at the top. No dirt can collect on the orifice. Small particles of dirt will be held in suspension until discharged by the full differential purging action.
- The discharge orifice is surrounded by a water seal, preventing live steam loss. Automatic air venting is provided by a small hole in the bucket.
- Inverted bucket traps require no adjustment. They do not allow condensate backup and are resistant to water hammer.

Connections

Screwed BSPT and NPT (401-SH only)
Socketweld
Flanged DIN or ANSI (welded)

Maximum Operating Conditions

Maximum allowable pressure (vessel design):
Model 401-SH: 69 bar @ 427°C
Model 501-SH: 106 bar @ 454°C

Maximum operating pressure:
Model 401-SH: 69 bar
Model 501-SH: 106 bar

Maximum back pressure: 99% of inlet pressure

Materials

Body:	
Model 401-SH	Carbon steel ASTM A106 Gr. B Sch. 80 pipe
Model 501-SH	Stainless steel 316L ASTM A312 Sch. 80 pipe
Internals:	Stainless steel – 304
Valve and seat:	Titanium
Connections:	
Model 401-SH	Stainless steel – 304
Model 501-SH	Stainless steel – 316L

Specification

Inverted bucket steam trap, type 401-SH in carbon steel or 501-SH in stainless steel, with accumulation chamber, continuous air venting at steam temperature, stainless steel leverage system, with the discharge orifice at the top of the trap. Maximum allowable back pressure 99% of inlet pressure.

How to Order

Specify:

- Model number
- Size and type of pipe connection. When flanges are required, specify type of flange in detail
- Maximum working pressure that will be encountered or orifice size

Table ST-96-1. Model 401-SH and Model 501-SH Bottom Inlet, Top Outlet Trap (dimensions in mm)

Model No.	401-SH	501-SH
Pipe Connections	15 – 20	15 – 20
"A" Body Outside Diameter	100	100
"B" Face-to-Face (screwed & SW)	279	350
"BB" Height (flanged 401-SH PN100 & 501-SH PN250*)	375 – 389	476 – 480
Weight in kg (screwed & SW)	5,5	7
Weight in kg (flanged 401-SH PN100 & 501-SH PN250*)	6,7 – 7,3	13 – 13,5

* Other flange sizes, ratings and face-to-face dimensions are available on request.
All models are CE Marked according to the PED (97/23/EC).

All dimensions and weights are approximate. Use certified print for exact dimensions. Design and materials are subject to change without notice.

Armstrong International SA • Parc Industriel des Hauts-Sarts (2e Avenue) • 4040 Herstal • Belgium
Tel.: +32 (0)4 240 90 90 • Fax: +32 (0)4 248 13 61
www.armstrong.be • marketing@armstrong.be

401-SH/501-SH Inverted Bucket Superheated Steam Traps

Carbon Steel or Stainless Steel for Vertical Installation

For Pressures to 106 bar...Capacities to 590 kg/h

Installation Recommendations

What little condensate there is on superheat and high pressure/low load service usually forms in drip legs and in the traps themselves. Therefore proper piping and drip legs of adequate size and diameter are essential for the successful operation of the Armstrong superheat trap.

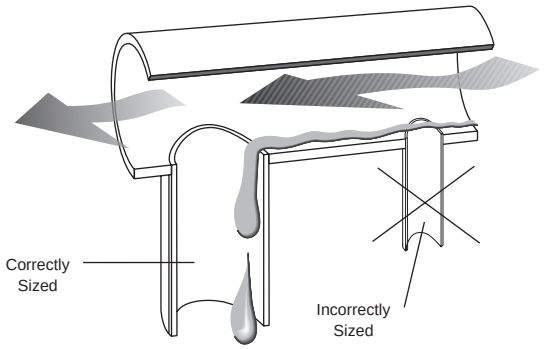

Drip Leg Sizing

The properly sized drip leg will capture condensate. Too small a drip leg can actually cause a venturi "piccolo" effect where pressure drop pulls condensate out of the drip leg and trap.

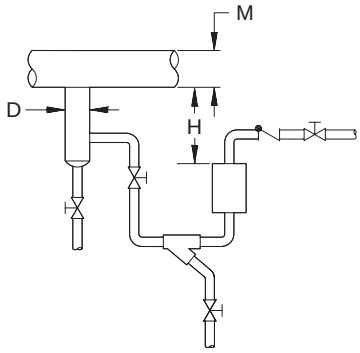

Trap Draining Drip Leg on Steam Main

Table ST-97-1. Model 401/501 Capacity

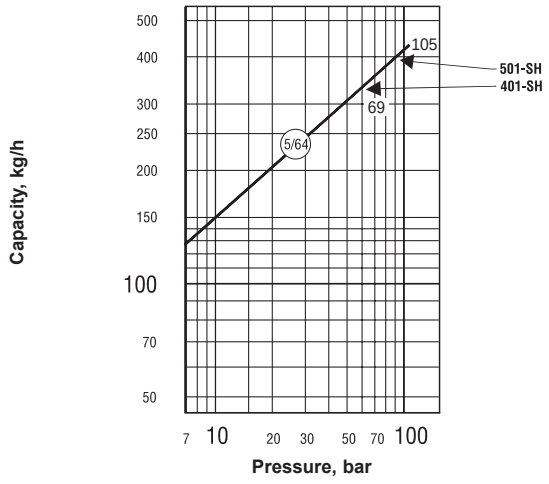

Table ST-97-2. Recommended Steam Main and Branch Line Drip Leg Tracing

M		D		H Drip Leg Length Minimum			
Steam Main Size		Drip Leg Diameter		Supervised Warm-Up		Automatic Warm-Up	
mm	in.	mm	in.	mm	in.	mm	in.
15	1/2"	15	1/2"	250	10"	710	28"
20	3/4"	20	3/4"	250	10"	710	28"
25	1"	25	1"	250	10"	710	28"
50	2"	50	2"	250	10"	710	28"
75	3"	75	3"	250	10"	710	28"
100	4"	100	4"	250	10"	710	28"
150	6"	100	4"	250	10"	710	28"
200	8"	100	4"	300	12"	710	28"
250	10"	150	6"	380	15"	710	28"
300	12"	150	6"	450	18"	710	28"
350	14"	200	8"	530	21"	710	28"
400	16"	200	8"	600	24"	710	28"
450	18"	250	10"	685	27"	710	28"
500	20"	250	10"	760	30"	760	30"
600	24"	300	12"	910	36"	910	36"

Air Steam Condensate

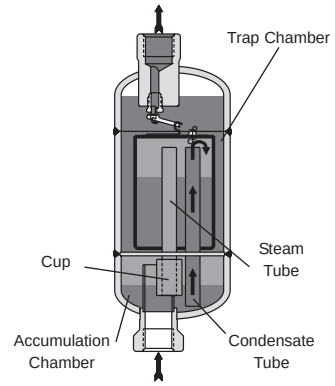

Cycling – Discharge Valve Wide Open
With the steam feed tube to the trap chamber sealed, condensate flows through the condensate feed tube (from accumulation chamber) into the trap chamber. This sinks the inverted bucket, which opens the discharge valve, cycling the trap.

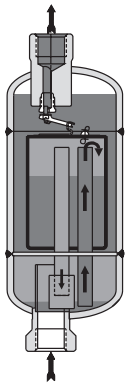

Cycle Ending
As the level of condensate in the accumulation chamber falls, the cup sealing the steam feed tube moves downward, opening a passage for steam to flow into trap chamber.

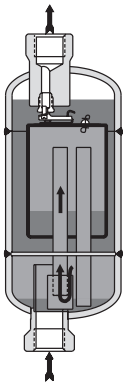

Trap Closed
As steam begins to flow through the accumulation chamber and up the steam feed tube under the inverted bucket in the trap chamber, the discharge valve closes tightly.

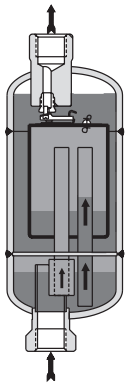

Cycle About to Repeat
As the level of condensate rises in the accumulation chamber, the cup floats up until it again seals the steam feed tube, and the cycle repeats.

All dimensions and weights are approximate. Use certified print for exact dimensions. Design and materials are subject to change without notice.

5000 Series Inverted Bucket Steam Traps

Forged Chrome-moly Steel for Vertical Installation

For Pressures to 124 bar...Capacities to 2 340 kg/h

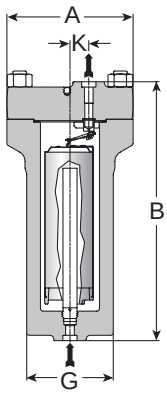

Series 5133G & 5133G Traps

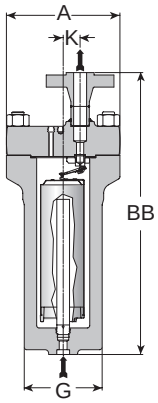

Series 5133G-FW & 5133G-FW Traps



Description

Armstrong offers its 5000 Series forged chrome-moly steel traps for vertical installation with a choice of screwed, socketweld or flanged connections.

A unique leverage system multiplies the force provided by the bucket to open the valve against system pressure. The mechanism is free-floating and has no fixed pivots to create wear or friction.

Because the mechanism is located at the top of the trap, no dirt can collect on the orifice. Small particles of dirt are held in suspension until discharged by the full differential purging action when the bucket sinks, pulling the valve off the seat.

The discharge orifice is surrounded by a water seal, preventing live steam loss. Automatic air venting is provided by a small vent hole in the bucket. This provides continuous automatic air and CO_2 venting at steam temperature.

Inverted bucket traps drain continuously, although discharging intermittently, to prevent condensate backup. They are also resistant to water hammer.

Operation on Superheat. A normally operating bucket trap is filled with saturated steam and condensate. Superheated steam can enter only as fast as the steam inside can condense. As a result, the temperature of the trap is at (or slightly below) saturated steam temperature, regardless of the degree of superheat.

Trap Selection. The pressure-containing parts of the steam trap should safely withstand the maximum pressure and temperature conditions of the system. For example, a trap is required for a 68 bar main at 510°C. The normal operating temperature of the trap will be about 286°C. A Model 5133G trap should be selected, even though several smaller traps are capable of handling the working pressure.

For Superheat Service:

1. Don't oversize the orifice; a restricted orifice may be advisable.
2. Specify a burnished valve and seat and an extended inlet tube and check valve.
3. Provide a drip leg of adequate diameter and length.
4. Provide a generous length (600-900 mm) of inlet piping, with the trap below the main.
5. Don't insulate the trap or the inlet piping.

Connections

Screwed BSPT and NPT
Socketweld
Flanged DIN or ANSI (welded)

Materials

Body:	ASTM A182 F22 Class 3
Internals:	All stainless steel – 304
Valve and seat:	Titanium

Options

- Stainless steel internal check valve
- Burnished valve and seat

Table ST-98-1. 5000 Series Bottom Inlet, Top Outlet Trap (dimensions in mm)
Add suffix "CV" to trap number for internal check valve.

Model No. Screwed or SW Model No. Flanged	5133G 5133G-FW	5155G 5155G-FW
Pipe Connections	15 – 20 – 25	20 – 25 – 32
"A" Flange Diameter	216	264
"B" Face-to-Face (screwed & SW)	362	412
"BB" Face-to-Face (flanged PN160*)	457 – 463 – 470	540 – 540 – 540
"G" Body Outside Diameter	146	194
"K" ℄ Outlet to ℄ Inlet	33,0	44,5
Number of Bolts	8	10
Weight in kg (screwed & SW)	44,5	77,5
Weight in kg (flanged PN160*)	47,0 – 47,5 – 48,0	89,0 – 89,5 – 90,0

* Other flange sizes, ratings and face-to-face dimensions are available on request.
All models are CE Marked according to the PED (97/23/EC).

All dimensions and weights are approximate. Use certified print for exact dimensions. Design and materials are subject to change without notice.

Armstrong International SA • Parc Industriel des Hauts-Sarts (2e Avenue) • 4040 Herstal • Belgium
Tel.: +32 (0)4 240 90 90 • Fax: +32 (0)4 248 13 61
www.armstrong.be • marketing@armstrong.be

5000 Series Inverted Bucket Steam Traps

Forged Chrome-moly Steel for Vertical Installation

For Pressures to 124 bar...Capacities to 2 340 kg/h

Table ST-99-1. Model 5133G Capacity

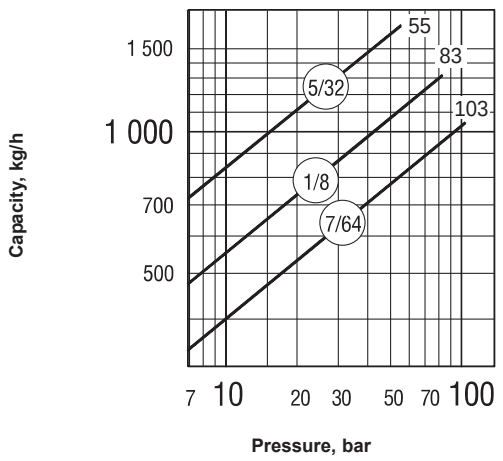

Table ST-99-2. Model 5155G Capacity

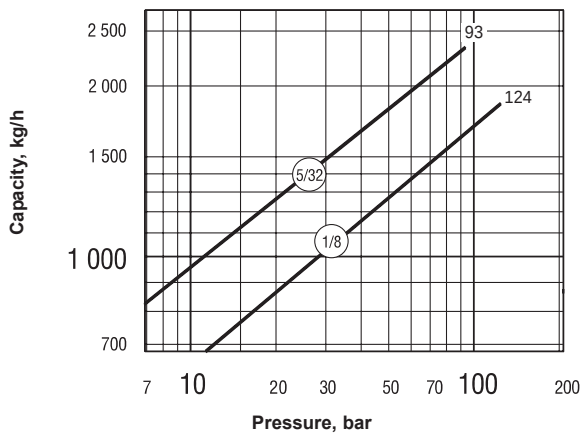

Table ST-99-3. Pressure-Temperature Rating for Forged Steel Traps

Model No.	Maximum Operating Pressure, Saturated Steam	Maximum Allowable Pressure (Vessel Design) of Pressure-Containing Parts at Indicated Temperature							
		-28 / +343°C	371°C	399°C	427°C	454°C	482°C	510°C	538°C
	bar	bar							
5133G	103	146	146	146	**146**	137	119	93	64
5155G	124	174	174	174	**174**	163	143	111	76,5

Notes: Maximum operating pressure to be marked on nameplate will be determined by actual orifice used.
Maximum allowable pressures shown in boldface will be marked on nameplate, unless otherwise requested.
Traps with flanges may have different pressure-temperature ratings.
Maximum back pressure is 99% of inlet pressure.

Options

Internal Check Valves are spring loaded stainless steel and screw into an extended inlet tube having a pipe coupling at the top to save fittings, labor and money. Internal check valves may result in slightly reduced capacities.

Screwed Connections are available in all sizes for pressures of 63 bar or less. Traps for pressures of 63 bar or higher are available with socketweld or flanged connections.

Specification

Inverted bucket steam trap, type ... in forged chrome-moly steel, with continuous air venting at steam temperature, free-floating stainless steel mechanism, with the discharge orifice at the top of the trap. Maximum allowable back pressure 99% of inlet pressure.

How to Order

Specify:

- Model number
- Size and type of pipe connection. When flanges are required, specify type of flange in detail
- Maximum working pressure that will be encountered or orifice size
- Any options required

All dimensions and weights are approximate. Use certified print for exact dimensions. Design and materials are subject to change without notice.

6000 Series Inverted Bucket Steam Traps

Forged Chrome-moly Steel for Vertical Installation

For Pressures to 186 bar...Capacities to 2 950 kg/h

Description

Armstrong offers its 6000 Series forged chrome-moly steel traps for vertical installation with a choice of socketweld or flanged connections.

A unique leverage system multiplies the force provided by the bucket to open the valve against system pressure. The mechanism is free-floating and has no fixed pivots to create wear or friction.

Because the mechanism is located at the top of the trap, no dirt can collect on the orifice. Small particles of dirt are held in suspension until discharged by the full differential purging action when the bucket sinks, pulling the valve off the seat.

The discharge orifice is surrounded by a water seal, preventing live steam loss. Automatic air venting is provided by a small vent hole in the bucket. This provides continuous automatic air and CO_2 venting at steam temperature.

Inverted bucket traps drain continuously, although discharging intermittently, to prevent condensate backup. They are also resistant to water hammer.

Operation on Superheat. A normally operating bucket trap is filled with saturated steam and condensate. Superheated steam can enter only as fast as the steam inside can condense. As a result, the temperature of the trap is at (or slightly below) saturated steam temperature, regardless of the degree of superheat.

Trap Selection. The pressure-containing parts of the steam trap should safely withstand the maximum pressure and temperature conditions of the system. For example, a trap is required for a 102 bar main at 538°C. The normal operating temperature of the trap will be about 299°C. A Model 6155G trap should be selected, even though several smaller traps are capable of handling the working pressure.

For Superheat Service:

1. Don't oversize the orifice; a restricted orifice may be advisable.
2. Specify a burnished valve and seat and an extended inlet tube and check valve.
3. Provide a drip leg of adequate diameter and length.
4. Provide a generous length (600-900 mm) of inlet piping, with the trap below the main.
5. Don't insulate the trap or the inlet piping.

Connections

Socketweld
Flanged DIN or ANSI (welded)

Materials

Body:	ASTM A182 F22 Class 3
Internals:	All stainless steel – 304
Valve and seat:	Titanium

Options

- Stainless steel internal check valve
- Burnished valve and seat

Screwed connections are available in all sizes for pressures of 62 bar or less. Traps for pressures of 62 bar or higher are available with socketweld or flanged connections.

Specification

Inverted bucket steam trap, type 6155 in forged chrome-moly steel, with continuous air venting at steam temperature, free-floating stainless steel mechanism, with the discharge orifice at the top of the trap. Maximum allowable back pressure 99% of inlet pressure.

How to Order

Specify:

- Model number
- Size and type of pipe connection. When flanges are required, specify type of flange in detail
- Maximum working pressure that will be encountered or orifice size
- Any options required

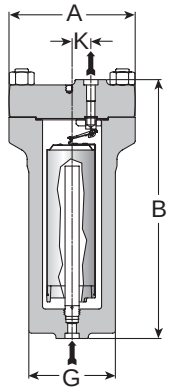

Model 6000 Trap

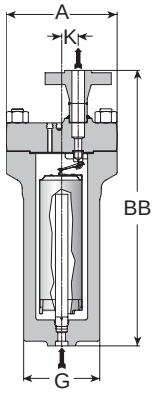

Series 6000 FW Trap

Table ST-100-1. 6000 Series Bottom Inlet, Top Outlet Trap (dimensions in mm)
Add suffix "CV" to trap number for internal check valve.

Model No. Screwed or SW Model No. Flanged	6155G 6155G-FW
Pipe Connections	25 – 32
"A" Flange Diameter	300
"B" Face-to-Face (SW)	613
"BB" Face-to-Face (flanged PN250*)	740 – 740
"G" Body Outside Diameter	213
"K" ℄ Outlet to ℄ Inlet	44,5
Number of Bolts	10
Weight in kg (SW)	147,4
Weight in kg (flanged PN250*)	151,0 – 154,0

* Other flange sizes, ratings and face-to-face dimensions are available on request.
All models are CE Marked according to the PED (97/23/EC).

All dimensions and weights are approximate. Use certified print for exact dimensions. Design and materials are subject to change without notice.

Armstrong International SA • Parc Industriel des Hauts-Sarts (2e Avenue) • 4040 Herstal • Belgium
Tel.: +32 (0)4 240 90 90 • Fax: +32 (0)4 248 13 61
www.armstrong.be • marketing@armstrong.be

6000 Series Inverted Bucket Steam Traps

Forged Chrome-moly Steel for Vertical Installation

For Pressures to 186 bar...Capacities to 2 950 kg/h

Table ST-101-1. Model 6155G Capacity

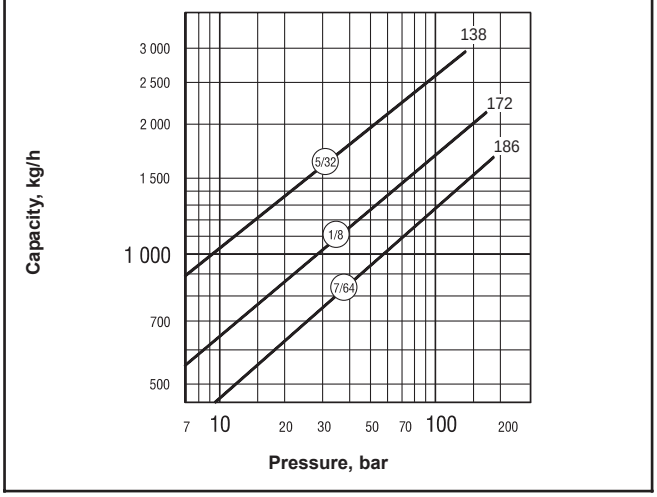

Table ST-101-2. Pressure-Temperature Rating for Forged Steel Traps

Model No.	Maximum Operating Pressure, Saturated Steam	Maximum Allowable Pressure (Vessel Design) of Pressure-Containing Parts at Indicated Temperature							
		-28 / +343°C	371°C	399°C	427°C	454°C	482°C	510°C	538°C
	bar	bar							
6155G	186	241	241	241	241	**241**	213	166	114

Notes: Maximum operating pressure to be marked on nameplate will be determined by actual orifice used.
Maximum allowable pressures shown in boldface will be marked on nameplate, unless otherwise requested.
Traps with flanges may have different pressure-temperature ratings.
Maximum back pressure is 99% of inlet pressure.

Options

Internal Check Valves are spring loaded stainless steel and screw into an extended inlet tube having a pipe coupling at the top to save fittings, labor and money. Internal check valves may result in slightly reduced capacities.

All dimensions and weights are approximate. Use certified print for exact dimensions. Design and materials are subject to change without notice.

2000 Series Stainless Steel Steam Traps

The Armstrong stainless steel traps – Series 1000, Series U-1000, Series 1800 and Series 2000 – have high resistance to damage from freeze-ups. They also offer high resistance to wear and corrosion for longer service reliability, and they provide continuous air venting.

Armstrong stainless steel traps provide maximum ease and economy of installation, inspection or replacement. What's more, an Armstrong stainless steel trap is the ideal solution for trapping applications such as tracer lines, steam mains and heating and processing applications.

Wear and corrosion resistance

Free-floating guided lever valve mechanism is "frictionless," and all wear points are heavily reinforced. All working parts are stainless steel. Valve and seat are stainless steel, individually ground and lapped together in matched sets.

360° universal 304 stainless steel connector

Provides quick, easy in-line renewability along with all the proven advantages of an inverted bucket operation. Also available with optional IS-2 integral strainer connector with 20 x 20 mesh stainless steel strainer.

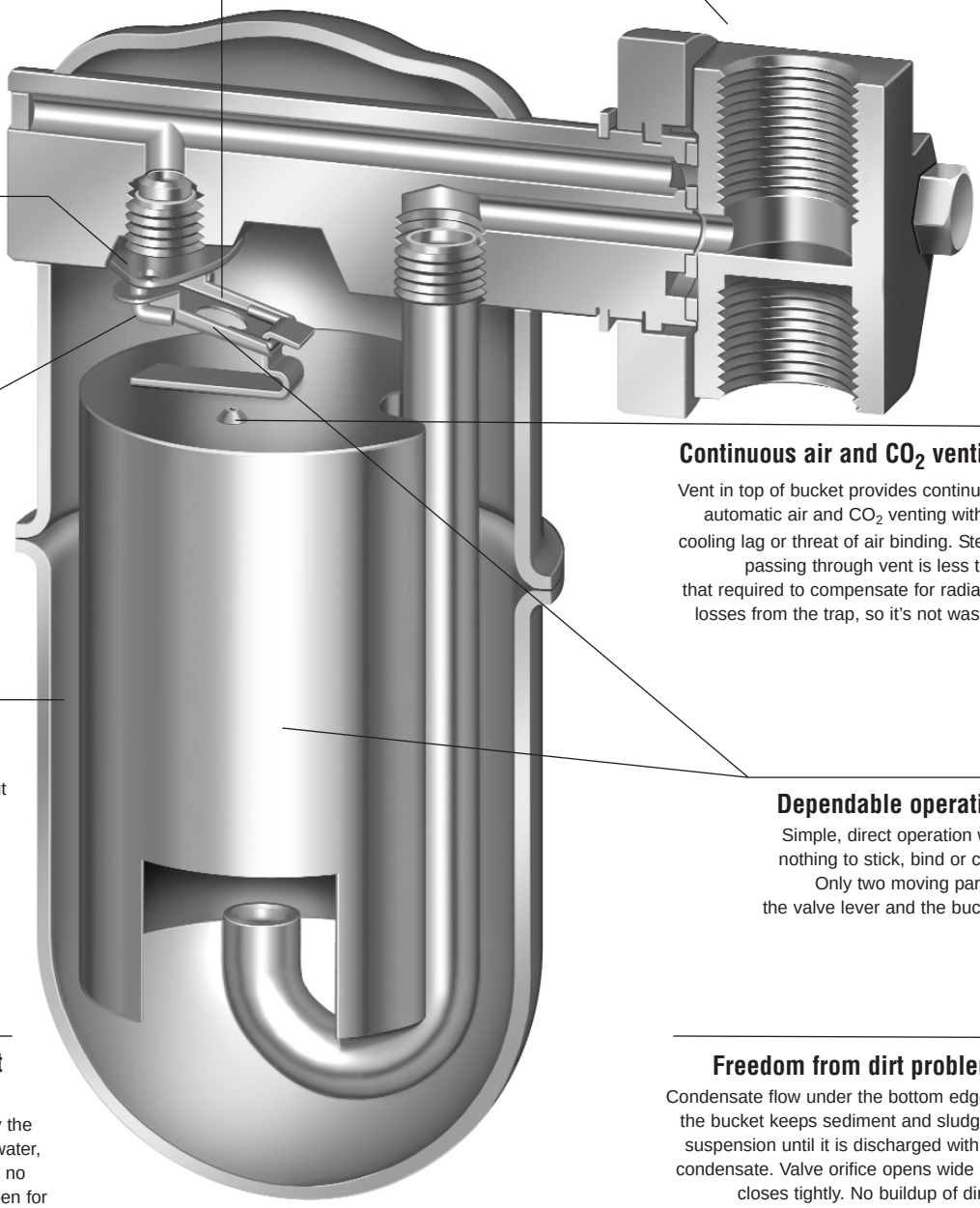

Virtually no steam loss

Steam does not reach the water-sealed discharge valve.

Purging action

Snap opening of the valve creates a momentary pressure drop and turbulence in the unit drained. This breaks up films of condensate and air and speeds their flow to the trap.

Continuous air and CO_2 venting

Vent in top of bucket provides continuous automatic air and CO_2 venting with no cooling lag or threat of air binding. Steam passing through vent is less than that required to compensate for radiation losses from the trap, so it's not wasted.

Sealed, tamperproof 304-L stainless steel package

Able to withstand freeze-ups without damage.

Dependable operation

Simple, direct operation with nothing to stick, bind or clog. Only two moving parts – the valve lever and the bucket.

Excellent operation against back pressure

Since trap operation is governed by the difference in density of steam and water, back pressure in the return line has no effect on the ability of the trap to open for condensate and close against steam.

Freedom from dirt problems

Condensate flow under the bottom edge of the bucket keeps sediment and sludge in suspension until it is discharged with the condensate. Valve orifice opens wide and closes tightly. No buildup of dirt or close clearances to be affected by scale.

Resistance to damage from water hammer

Open bucket or float will not collapse as a result of water hammer.

Armstrong International SA • Parc Industriel des Hauts-Sarts (2e Avenue) • 4040 Herstal • Belgium
Tel.: +32 (0)4 240 90 90 • Fax: +32 (0)4 248 13 61
www.armstrong.be • marketing@armstrong.be

2000 Series Stainless Steel Steam Traps

For Pressures to 45 bar…Capacities to 590 kg/h

With the Series 2000 360° universal connector, you can install inverted bucket efficiency and long service life in any piping configuration with little or no repiping. You get the reliability of the inverted bucket operating principle, plus all the benefits of all-stainless steel construction:

- A sealed, tamperproof package
- A compact, lightweight trap
- The ability to withstand freeze-ups without damage
- Exceptional corrosion resistance
- A three-year guarantee against defective materials or workmanship

Series 2000 steam traps combine savings in three important areas: energy, installation and replacement. The 360° universal connector provides quick, easy in-line renewability along with all the proven advantages of an inverted bucket operation. Choice of NPT or BSPT screwed connections, or socketweld connections.

Also available with optional IS-2 integral strainer connector.



Available with Standard Connector
Material: 304 Stainless Steel



Available with IS-2 Integral Strainer Connector
(shown with optional blowdown valve)
Material: 316 Stainless Steel

1000 & U-1000 Series Inverted Bucket Steam Traps

All Stainless Steel for Vertical Installation (Except U-1000 w/Strainer)

For Pressures to 45 bar...Capacities to 2 000 kg/h

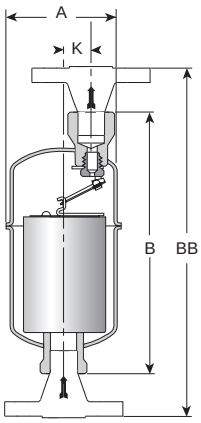

Model 1010 Trap

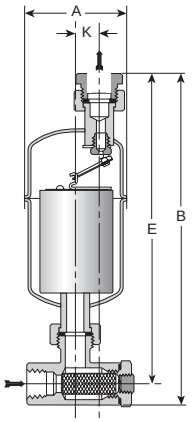

Model U-1010 Trap with Strainer

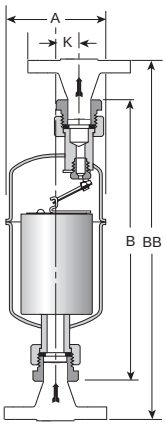

Model U-1010 Trap



Description

Armstrong 1000 Series stainless steel inverted bucket steam traps normally last three to four times longer than conventional traps used in identical services. Heat-treated stainless steel valves and seats are of the same design, material and workmanship as those used in traps for pressures up to 62 bar and temperatures to 482°C. More compact than cast iron or carbon steel equivalents, 1000 Series traps are ideal for trapping applications such as tracer lines, steam mains and heating/process applications.

For simple installation, inspection and replacement, Armstrong offers U-1000 Series all-stainless steel inverted bucket traps with union connections. U-1000 Series are also offered with integral carbon steel strainers with 0,045'' perforated stainless steel screens.

Both the 1000 and U-1000 Series are **guaranteed for three years**.

Maximum Operating Conditions

Maximum allowable pressure (vessel design):

Model 1010, 1011:	28 bar @ 427°C
Model U-1010, U-1011:	28 bar @ 260°C
Model 1022:	45 bar @ 316°C
Model U-1022:	31 bar @ 260°C
Model 1013:	31 bar @ 427°C

Maximum operating pressure:

Model 1010, U-1010:	10,5 bar
Model 1011, U-1011:	28 bar
Model 1022:	45 bar @ 316°C
	43 bar @ 371°C
	41,6 bar @ 427°C
Model U-1022:	31 bar
Model 1013:	31 bar

Maximum back pressure: 99% of inlet pressure

Connections

Screwed BSPT and NPT
Socketweld
Unions
Unions with strainer
Flanged DIN or ANSI (welded)

Materials

Body:	ASTM A240 Grade 304L
Internals:	All stainless steel – 304
Valve and seat:	Hardened chrome steel – 440F (<38 bar)
	Titanium (>38 bar)
Strainer body:	Carbon steel
Strainer screen:	Stainless steel

Options

- Stainless steel internal check valve
- Thermic vent bucket 17 bar maximum; for Model 1022 – 1 bar maximum
- Wiggle wire

Specification

Inverted bucket steam trap, type ... in all stainless steel, freeze resistant, without gaskets, with continuous air venting at steam temperature, free-floating stainless steel mechanism, and orifice at the top of the trap. Maximum allowable back pressure 99% of inlet pressure.

How to Order

Specify:

- Model number
- Size and type of pipe connection
- Maximum working pressure that will be encountered or orifice size
- Any options required

Table ST-104-1. 1000 Series Bottom Inlet, Top Outlet Trap (dimensions in mm)

Model No.	1010	1011	1022	1013
Pipe Connections	15 – 20	15 – 20	20	25
"A" Body Outside Diameter	70	70	100	100
"B" Face-to-Face (screwed & SW)	152 – 152 / 137 – 144	183 – 183 / 167 – 175	221 / 217	289 / 289
"BB" Face-to-Face (flanged PN40*)	195 – 200	225 – 230	271	375
"K" ℄ Outlet to ℄ Inlet	14	14	23	30
Weight in kg (screwed & SW)	0,7	0,8	2	3,4
Weight in kg (flanged PN40*)	2,1 – 2,8	2,2 – 2,9	4,1	6,0

* Standard flanges are in carbon steel, stainless steel flanges are optional. Other flange sizes, ratings and face-to-face dimensions are available on request. Shade indicates products that are CE Marked according to the PED (97/23/EC). All the other models comply with the Article 3.3 of the same directive.

All dimensions and weights are approximate. Use certified print for exact dimensions. Design and materials are subject to change without notice.

Armstrong International SA • Parc Industriel des Hauts-Sarts (2e Avenue) • 4040 Herstal • Belgium
Tel.: +32 (0)4 240 90 90 • Fax: +32 (0)4 248 13 61
www.armstrong.be • marketing@armstrong.be

1000 & U-1000 Series Inverted Bucket Steam Traps

All Stainless Steel for Vertical Installation (Except U-1000 w/Strainer)

For Pressures to 45 bar...Capacities to 2 000 kg/h

Table ST-105-1. Model 1010 & U-1010 Capacity

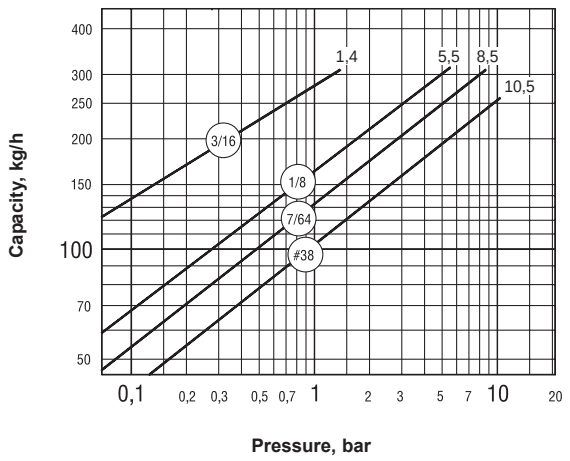

Table ST-105-2. Model 1011 & U-1011 Capacity

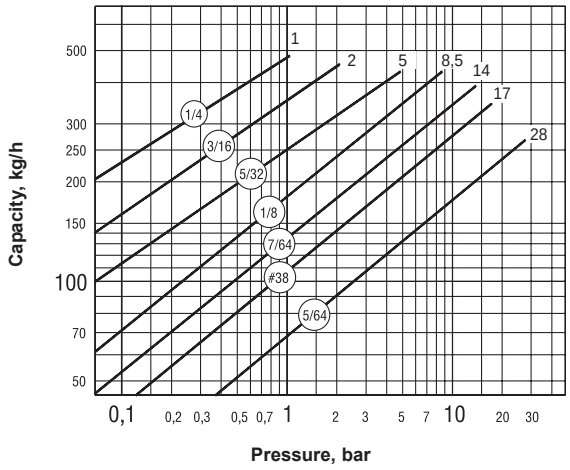

Table ST-105-3. Model 1022 & U-1022 Capacity

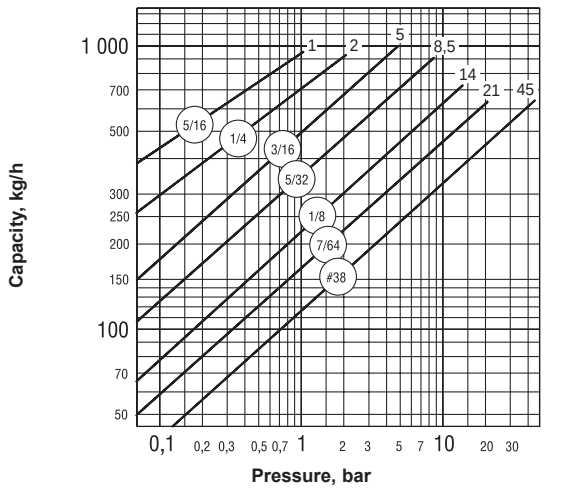

Table ST-105-4. Model 1013 Capacity

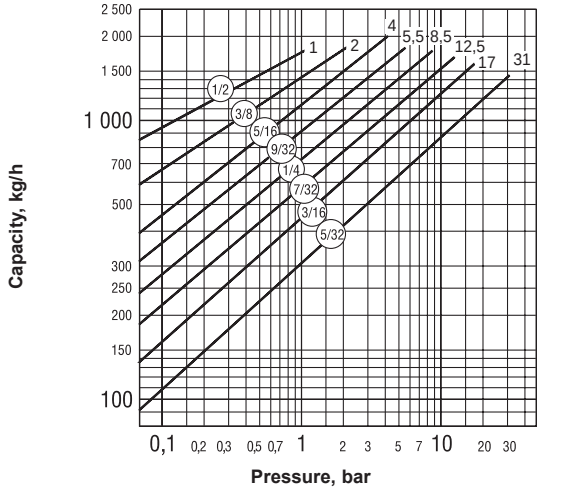

Note: #38 orifice in Model U-1022 is limited to 31 bar.

Table ST-105-5. U-1000 Series Traps with Union Connections (dimensions in mm)

Model No.	U-1010	U-1011	U-1022
Pipe Connections	15 – 20	15 – 20	20
"A" Body Outside Diameter	70	70	97
"B" Face-to-Face (screwed & SW)	202	232	278
"B" Face-to-Face (screwed & SW) with Strainer	241	271	318
"K" ℄ Outlet to ℄ Inlet	14	14	18
Weight in kg (screwed & SW)	1	1,1	1,7
Weight in kg (screwed & SW) with Strainer	1,6	1,7	2,3

* Standard flanges are in carbon steel, stainless steel flanges are optional. Other flange sizes, ratings and face-to-face dimensions are available on request.

All dimensions and weights are approximate. Use certified print for exact dimensions. Design and materials are subject to change without notice.

1800 Series Inverted Bucket Steam Traps

All Stainless Steel for Horizontal Installation

For Pressures to 45 bar...Capacities to 1 090 kg/h

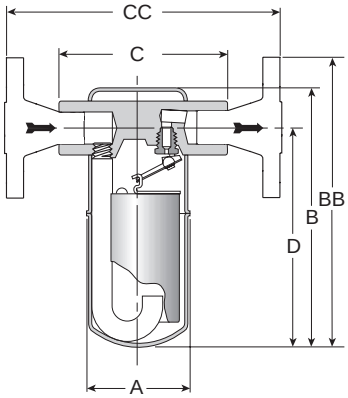

Model 1811 Trap

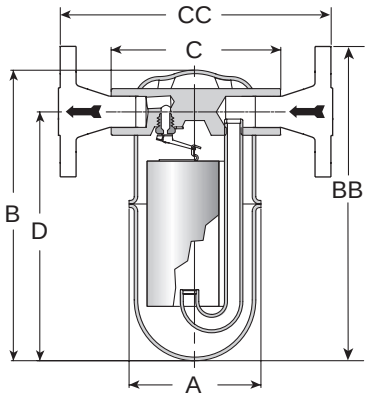

Model 1822 Trap



Description

A quick and easy "in-line" replacement for other types of side inlet/side outlet traps, the Armstrong 1800 Series brings together all the benefits of energy-efficient inverted bucket operation. Side inlet/outlet all-welded construction means an inverted bucket trap that will operate efficiently on applications such as tracer lines, drips, heating, processing and similar applications.

With the 1800 Series you get freeze-resistant, all-stainless steel construction, with a **three-year guarantee**, plus all the benefits of inverted bucket operation:

- Long, trouble-free service life
- Excellent purging action
- Continuous air venting
- Ease and flexibility of in-line installation

Maximum Operating Conditions

Maximum allowable pressure (vessel design):

Model 1810, 1811:	28 bar @ 427°C
Model 1822:	45 bar @ 315°C

Maximum operating pressure:

Model 1810:	14 bar
Model 1811:	28 bar
Model 1822:	45 bar @ 316°C
	43 bar @ 371°C
	41,6 bar @ 427°C

Maximum back pressure: 99% of inlet pressure

Connections

Screwed BSPT and NPT
Socketweld
Flanged DIN or ANSI (welded)

Materials

Body:	ASTM A240 Grade 304L
Internals:	All stainless steel – 304
Valve and seat:	Hardened chrome steel – 440F (<38 bar)
	Titanium (>38 bar)

Options

- Insu-Pak™ insulation for Models 1810/1811
- Stainless steel pop drain for Models 1811/1822
- Probe connection
- Wiggle wire

Specification

Inverted bucket steam trap, type ... in all stainless steel, freeze resistant, without gaskets, with continuous air venting at steam temperature, free-floating stainless steel mechanism, and orifice at the top of the trap. Maximum allowable back pressure 99% of inlet pressure.

How to Order

Specify:

- Model number
- Size and type of pipe connection
- Maximum working pressure that will be encountered or orifice size
- Any options required

Table ST-106-1. 1800 Series Side Inlet, Side Outlet Trap (dimensions in mm)

Model No.	1810	1811	1822
Pipe Connections	10 – 15 – 20	15 – 20	15 – 20 – 25
"A" Body Outside Diameter	70	70	99
"B" Height	142	167	218
"C" Face-to-Face (screwed & SW)	110	110	127
"CC" Face-to-Face (flanged PN40*)	150	150	190 – 190 – 200
"D" Bottom to ℄ Inlet	113	138 – 141	186 – 181
Weight in kg (screwed & SW)	0,8	0,9 – 1,0	3
Weight in kg (flanged PN40*)	2,3 – 2,3 – 2,8	2,5 – 3,2	4,5 – 5,2 – 5,6

* Standard flanges are in carbon steel, stainless steel flanges are optional. Other flange sizes, ratings and face-to-face dimensions are available on request.
All models comply with the article 3.3 of the PED (97/23/EC).

All dimensions and weights are approximate. Use certified print for exact dimensions. Design and materials are subject to change without notice.

Armstrong International SA • Parc Industriel des Hauts-Sarts (2e Avenue) • 4040 Herstal • Belgium
Tel.: +32 (0)4 240 90 90 • Fax: +32 (0)4 248 13 61
www.armstrong.be • marketing@armstrong.be

1800 Series Inverted Bucket Steam Traps

All Stainless Steel for Horizontal Installation

For Pressures to 45 bar...Capacities to 1 090 kg/h

Table ST-107-1. Model 1810 Capacity

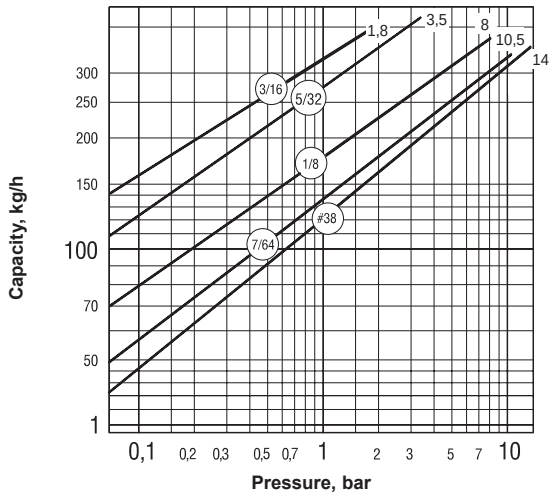

Table ST-107-2. Model 1811 Capacity

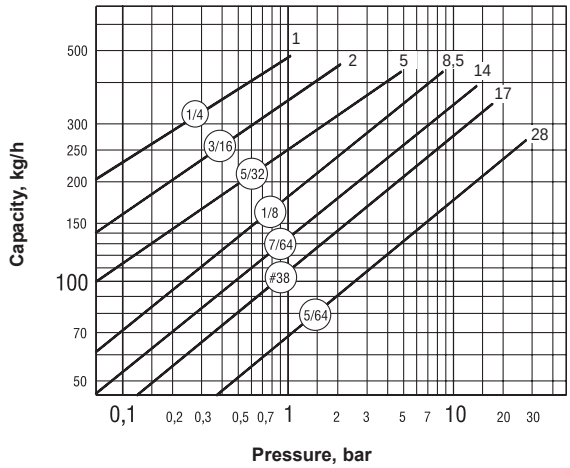

Options

Pop Drain for Freeze Protection

In general, a properly selected and installed Armstrong trap will not freeze as long as steam is coming to the trap. If the steam supply is shut off, a pop drain should be used to automatically drain the trap. Stainless steel pop drain available for Models 1811 and 1822.

Maximum Operating Conditions

Pressure:	41 bar
Temperature:	177°C

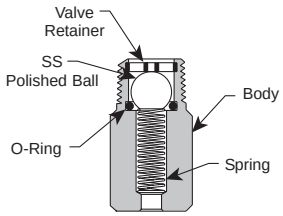

Table ST-107-3. Model 1822 Capacity

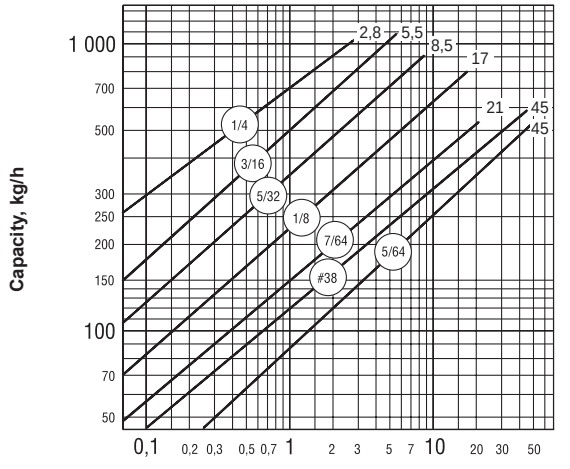

Insu-Pak™

Now you can insulate the in-line traps in your plant without complicating regular trap maintenance. Insu-Pak, a simple reusable insulation package, cuts the time and cost of in-field installation because it goes on in a snap. And it comes off just as easily. Insu-Pak can prevent trap freeze-up when used with a properly designed condensate manifold. Designed for use with Model 1810 and Model 1811 traps.

Probe connections are available for trap monitoring on Models 1811 and 1822.



All dimensions and weights are approximate. Use certified print for exact dimensions. Design and materials are subject to change without notice.

2000 Series Inverted Bucket Steam Traps

All Stainless Steel with 360° Connector

For Pressures to 45 bar...Capacities to 590 kg/h

Description

With the 2000 Series' 360° universal connector, you can install inverted bucket efficiency and long service life in any piping configuration with little or no repiping. You get the reliability of the inverted bucket operating principle, plus all the benefits of all-stainless steel construction:

- A sealed, tamperproof package
- A compact, lightweight trap
- The ability to withstand freeze-ups without damage
- Exceptional corrosion resistance
- A **three-year guarantee** against defective materials, defective workmanship.

2000 Series steam traps combine savings in three important areas: energy, installation and replacement. The 360° universal connector provides quick, easy in-line replacement along with all the proven advantages of inverted bucket operation. Also available with optional IS-2 integral strainer connector.

Maximum Operating Conditions

Maximum allowable pressure (vessel design):

Model 2010, 2011:	28 bar @ 427°C
Model 2022:	45 bar @ 315°C

Maximum operating pressure:

Model 2010:	14 bar
Model 2011:	28 bar
Model 2022:	45 bar @ 316°C
	43 bar @ 371°C
	41,6 bar @ 427°C

Maximum back pressure: 99% of inlet pressure

Connections

Screwed BSPT and NPT
Socketweld
Flanged DIN or ANSI (welded)

Materials

Body:	ASTM-A 240 Grade 304L
Internals:	All stainless steel – 304
Valve and seat:	Hardened chrome steel – 440F (<38 bar)
	Titanium (>38 bar)
Standard connector:	Stainless steel – 304
IS-2 connector with integral strainer:	ASTM A351 Gr.CF8
	20 x 20 mesh 304 SS Screen

Specification

Inverted bucket steam trap, type ... in all stainless steel, freeze resistant, with 360° universal connector, having continuous air venting at steam temperature, free-floating stainless steel mechanism, and orifice at the top of the trap. Maximum allowable back pressure 99% of inlet pressure.

How to Order

Specify:

- Model number
- Size and type of pipe connection
- Type of 360° connector (with or without strainer)
- Maximum working pressure that will be encountered or orifice size
- Any options required

Options

- Insu-Pak™ insulation for Models 2010/2011
- Stainless steel pop drain for Models 2011/2022
- Wiggle wire
- Probe connection for Models 2011/2022
- SS plug for IS-2 connector strainer blowdown connection 360° Connector Styles
- Standard connector
- IS-2 connector with integral strainer

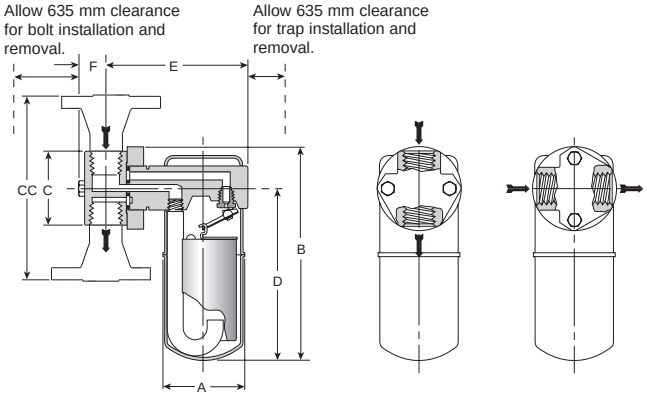

Model 2011 Trap with Standard Connector

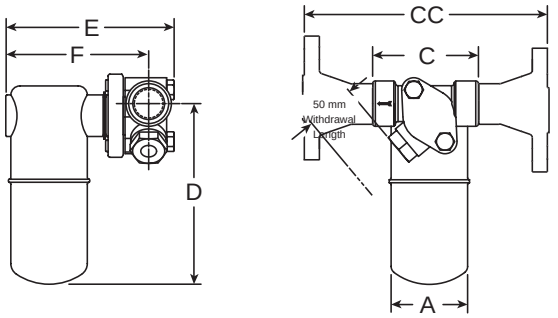

Model 2010-2022 with IS-2 Connector

Table ST-108-1. 2000 Series Traps with Standard Connector

Model No.	2010	2011	2022
Pipe Connections	15 – 20 – 25		
"A" Body Outside Diameter	68	68	98
"B" Height**	152	176	221
"C" Face-to-Face (screwed & SW)	60	60	60
"CC" Face-to-Face (flanged PN40*)	150 – 150 – 160		
"D" Bottom to ℄ Inlet	117	142	187
"E" ℄ to Outside (Standard)***	116	116	146
"F" ℄ to Bolt	25	25	25
Weight in kg (screwed & SW)	1,9	2,0	3,0
Weight in kg (flanged PN40*)	3,6 – 4,2 – 4,7	3,7 – 4,3 – 4,8	4,7 – 5,3 – 5,7

Table ST-108-1. 2000 Series Traps with IS-2 Integral Strainer Connector

Model No.	2010		2011		2022	
Pipe Connections	15 – 20	25	15 – 20	25	15 – 20	25
"C" Face-to-Face (screwed & SW)	89	102	89	102	89	102
"CC" Face-to-Face (flanged PN40*)	150	160	150	160	150	160
"D" Bottom to ℄ Inlet**	127	127	152	152	197	197
"E" Outside to Bolt	140	144	140	144	170	175
"F" ℄ to Outside	117	122	117	122	148	152
Weight in kg (screwed & SW)	2,2	2,4	2,3	2,5	3	3
Weight in kg (flanged PN40*)	3,9 – 4,5	5,1	4,0 – 4,6	5,2	4,7 – 5,3	5,7

* Standard flanges are in carbon steel, stainless steel flanges are optional. Other flange sizes, ratings and face-to-face dimensions are available on request.
** For IS-2 connector, add 15 mm to "B" and "D" dimensions when optional probe connections is required. Dimensions in mm
*** When trap is installed in vertical position on flanged connector, the "Export - Long Neck" version should be used.
All models comply with the article 3.3 of the PED (97/23/EC).

All dimensions and weights are approximate. Use certified print for exact dimensions. Design and materials are subject to change without notice.

Armstrong International SA • Parc Industriel des Hauts-Sarts (2e Avenue) • 4040 Herstal • Belgium
Tel.: +32 (0)4 240 90 90 • Fax: +32 (0)4 248 13 61
www.armstrong.be • marketing@armstrong.be

2000 Series Inverted Bucket Steam Traps

All Stainless Steel with 360° Connector

For Pressures to 45 bar...Capacities to 590 kg/h

Table ST-109-1. Model 2010 Capacity

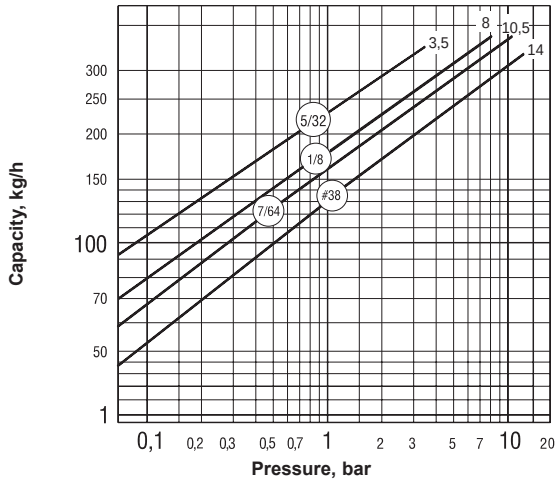

Table ST-109-2. Model 2011 Capacity

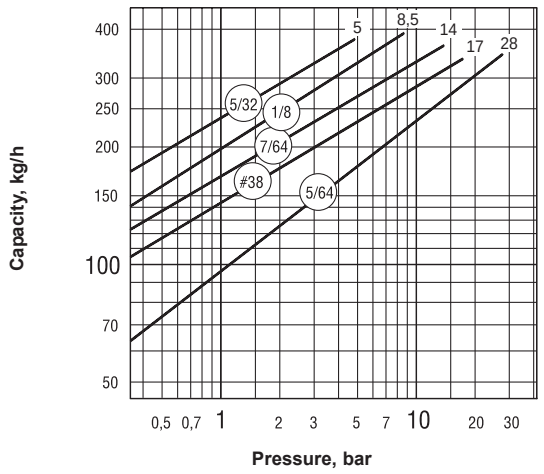

Connectors

Besides the inverted bucket traps, the standard connector or IS-2 connector with integral strainer can also be used on thermostatic, thermostatic wafer and controlled disc traps.

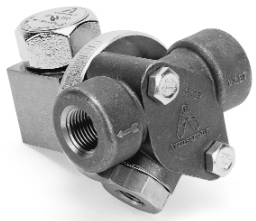

CD-3300 Controlled Disc with IS-2 Integral Strainer Connection

Table ST-109-3. Model 2022 Capacity

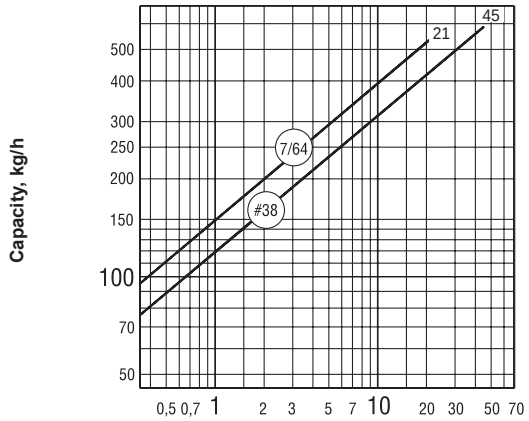

Options

Pop Drain for Freeze Protection

In general, a properly selected and installed Armstrong trap will not freeze as long as steam is coming to the trap. If the steam supply is shut off, a pop drain should be used to automatically drain the trap. Stainless steel pop drain available for Models 2011 and 2022.

Maximum Operating Conditions

Pressure: 41 bar
Temperature: 177°C

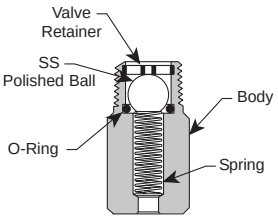

Insu-Pak™

Now you can insulate the in-line traps in your plant without complicating regular trap maintenance. Insu-Pak, a simple reusable insulation package, cuts the time and cost of in-field installation because it goes on in a snap. And it comes off just as easily. The Insu-Pak can prevent trap freeze-up when used with a properly designed condensate manifold. Designed for use with Model 2010 and Model 2011 traps.



Probe connections are available for trap monitoring for Models 2011 and 2022.

All dimensions and weights are approximate. Use certified print for exact dimensions. Design and materials are subject to change without notice.

TVS-4000 Stainless Steel Trap Valve Station

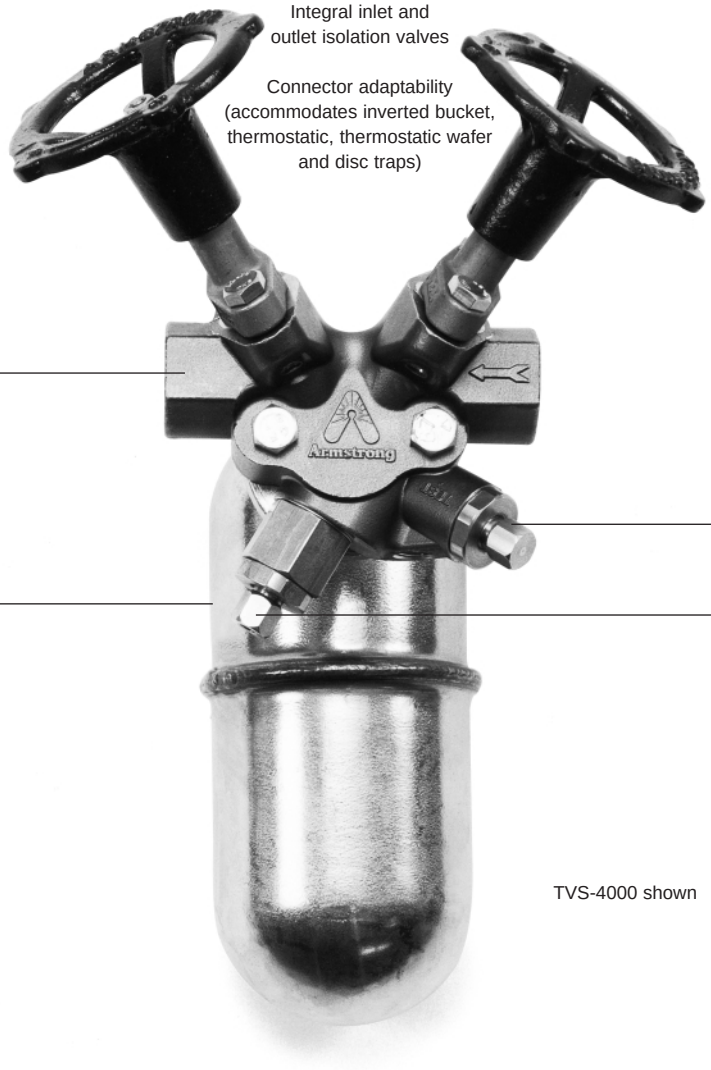

TVS-4000 shown

3-years guarantee

Trap Valve Station

- **Reduced costs**
  TVS saves on these fronts: energy, installation and maintenance.
- **Integration of trap, four valves and strainer**
  Inverted bucket long life and energy efficiency plus the savings and convenience of components merged into a single connector.
- **A full range of features**
  TVS has test and strainer blowdown valves. When installed with Model 2011 and 2022 steam traps, it will also accommodate the Armstrong pop drain as well as TrapAlert™ and SteamEye™ – remote steam trap monitoring and testing devices.
- **Reduced design time**
  Permits combining products with exact face-to-face dimensions.
- **Three-year guarantee**
  The TVS-4000 is guaranteed for three years when it's used with an Armstrong stainless steel inverted bucket trap.
- **Easy, in-line repairability**
- **Installation versatility**
  The connector design makes the TVS adaptable to any piping configuration.
- **Simplified trap testing**
  TVS enhances your capability to check trap operation and offers a built-in method to block and bleed traps.
- **Elimination of potential leak points**

TVS Series Stainless Steel Trap Valve Station

The Piston Valve

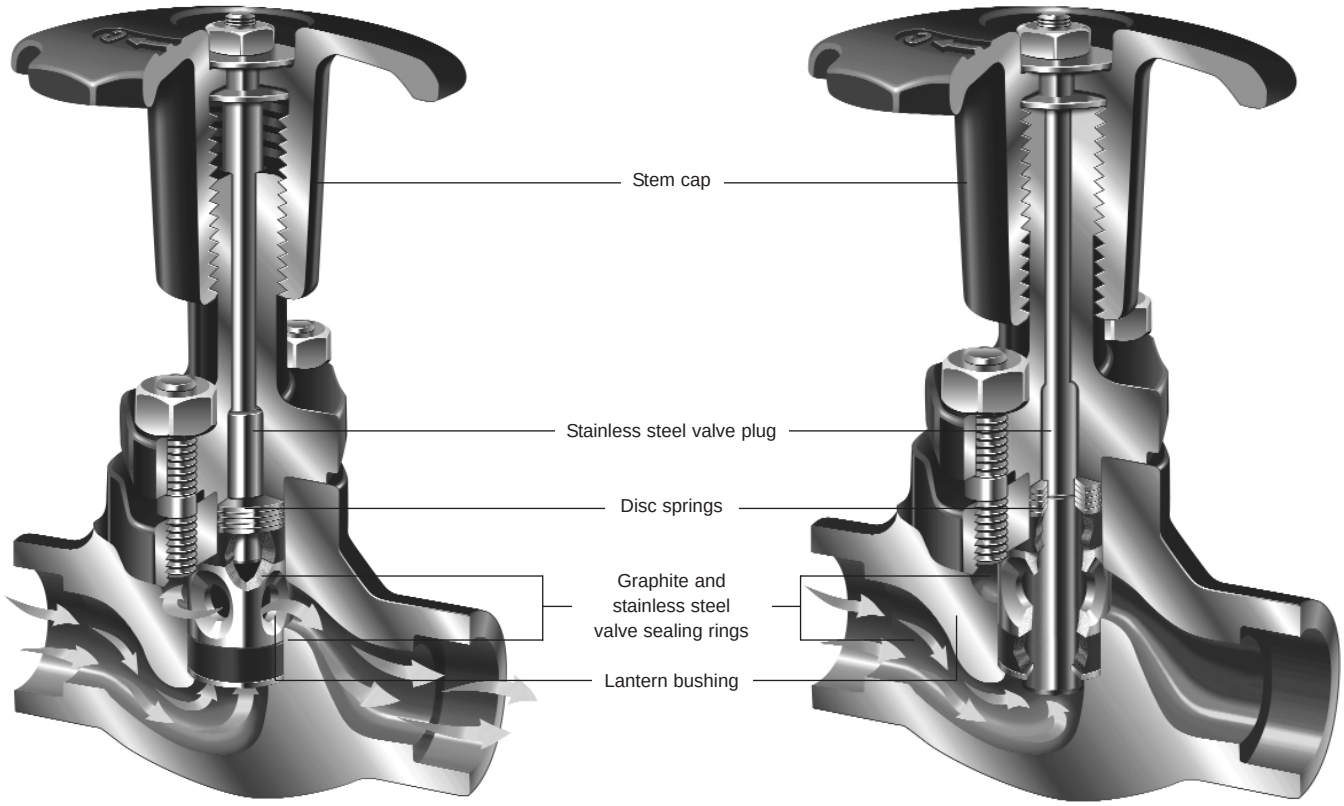

Open Position

Closed Position

- **Dual sealing action**
  The piston valve is a seatless valve that includes two graphite and stainless steel valve sealing rings that seal the stem and function as a valve seat. This combination provides long-term protection against leaks to the atmosphere and downstream piping.
- **Self-cleaning action**
  Stainless steel piston slides without rotating between the two valve sealing rings, preventing dirt from damaging the sealing surfaces.
- **Sealing integrity**
  Flexible disc springs automatically provide leak tightness by exerting pressure which keeps the upper and lower valve sealing rings compressed at all times. Sealing tightness is assured by the compression of the sealing rings against the piston and the valve body. This combination of disc springs and dual valve seal rings protects against expansion and contraction due to heating and cooling. This assures dependable operation, even after years of service.
- **Protected valve stem**
  The valve stem and sealing surfaces are completely protected from dirt and corrosion by the stem cap, whether in an open or closed position.
- **In-line repairability**
  All valve components may be easily replaced in-line.
- **Long-term operation**
  Piston valve design assures actuation even after many years without operation.

TVS-4000 Stainless Steel Trap Valve Station

Stainless Steel with 360° Connector

For Pressures to 45 bar...Capacities to 590 kg/h (Using 2000 Series Inverted Bucket Steam Traps)

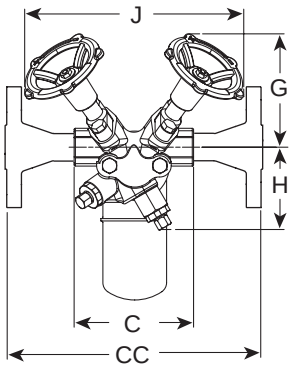

Model TVS-4000 with 2000 series SS Trap

Front View

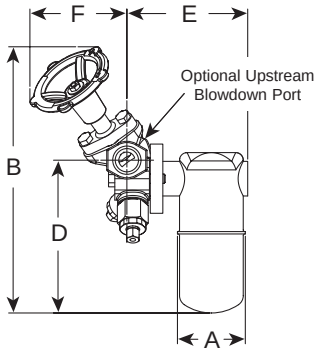

Model TVS-4000 with 2000 series SS Trap

Side View

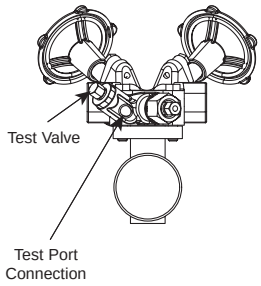

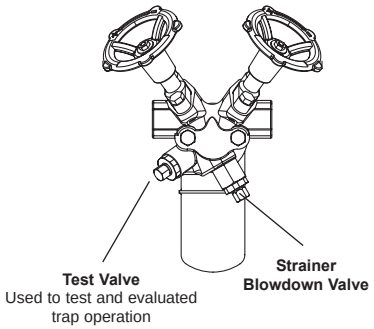

Model TVS-4000 with 2000 series SS Trap

Bottom View

Same principle. Different package with two piston-style isolation valves, test valve and integral stainless steel strainer with blowdown valve. Now the energy-saving performance and reliability of the inverted bucket steam trap are available in a versatile new package.

You'll still enjoy all the familiar benefits. And the same efficient condensate drainage from virtually every kind of steam-using equipment. What you'll find new are all the benefits of a piston valve integrated into the same space-saving package.

Materials – TVS-4000 Connector

Connector:	ASTM A351 Gr. CF8M
Strainer Screen:	Stainless steel
Screen Retainer:	Stainless steel
Gasket:	Stainless steel
Retainer Unit:	Stainless steel
Test Valve:	Stainless steel
Blowdown Valve:	Stainless steel

Connections

Screwed BSPT and NPT
Socketweld
Flanged DIN or ANSI (welded)

Isolation Valve Components

Handwheel:	Cast iron
Nut :	Stainless steel
Stem, Washers:	Stainless steel
Bonnet:	ASTM A351 Gr. CF8M
Bonnet, Bolts:	Stainless steel Gr. A2
Valve Plug:	Stainless steel
Disc Springs:	Stainless steel
Valve Sealing Rings:	Graphite and stainless steel
Lantern Bushing:	Stainless steel
Valve Washers:	Stainless steel

Materials – Series 2000 Traps

Body:	ASTM A240 Gr. 304L
Internals:	All stainless steel – 304
Valve and seat:	Hardened chrome steel – 440F (<38 bar) Titanium (>38 bar)

Table ST-112-1. TVS-4000 Series with 2000 Series Inverted Bucket Steam Trap (dimensions in mm)

Model No.	2010	2011	2022
Pipe Connections	15 – 20	15 – 20	15 – 20
"A" Trap Diameter	68	68	98
"B" Height Valve Open	203	268	318
"C" Face-to-Face (screwed & SW)	120	120	120
"CC" Face-to-Face (flanged PN40*)	384	384	384
"D" Connection ℄ to Bottom	120	154	203
"E" Connection ℄ to Outside of Trap	114	122	149
"F" Connection ℄ to Front of Handwheel (Valve Open)	89	98	98
"G" Connection ℄ to Top of Handwheel (Valve Open)	83	114	114
"H" Connection ℄ to Bottom of Connector	47	83	83
"J" Width Across Handwheels (Valve Open)	235	222	222
Weight in kg (screwed & SW)	4,1	4,3	5,4
Weight in kg (flanged PN40*)	5,8 – 6,4	6,0 – 6,6	7,1 – 7,7
Maximum Operating Pressure (Trap)	14 bar	28 bar	45 bar
Maximum Allowable Pressure (Trap)	28 bar @ 399°C	28 bar @ 399°C	45 bar @ 315°C

* Standard flanges are in carbon steel, stainless steel flanges are optional. Other flange sizes, ratings and face-to-face dimensions are available on request.
All models comply with the article 3.3 of the PED (97/23/EC).

All dimensions and weights are approximate. Use certified print for exact dimensions. Design and materials are subject to change without notice.

Armstrong International SA • Parc Industriel des Hauts-Sarts (2e Avenue) • 4040 Herstal • Belgium
Tel.: +32 (0)4 240 90 90 • Fax: +32 (0)4 248 13 61
www.armstrong.be • marketing@armstrong.be

TVS-4000 Stainless Steel Trap Valve Station

Stainless Steel with 360° Connector

For Pressures to 45 bar...Capacities to 590 kg/h (Using 2000 Series Inverted Bucket Steam Traps)

Table ST-113-1. Model 2010 Capacity

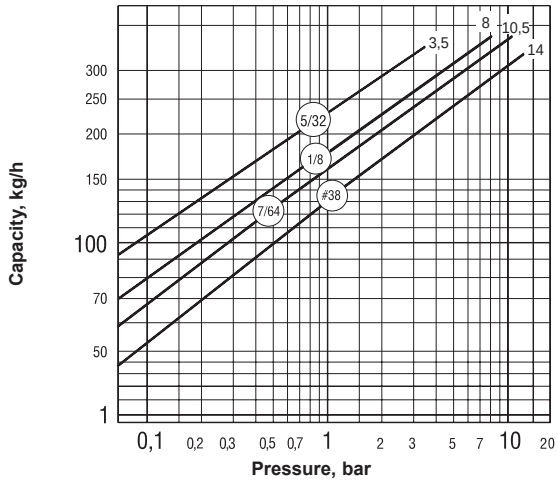

Table ST-113-2. Model 2011 Capacity

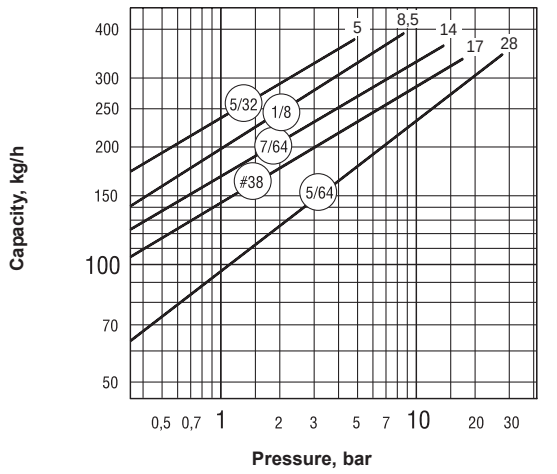

Table ST-113-4. How to Order

Model	Connection	Type of Connection Inlet/Outlet	Flow Direction	Trap Type
TVS-4000	15 20	NPT SW BSPT Flanged	R = Right to Left L = Left to Right	Inv. Bucket Disc Thermostatic Bimetallic F&T

Table ST-113-3. Model 2022 Capacity

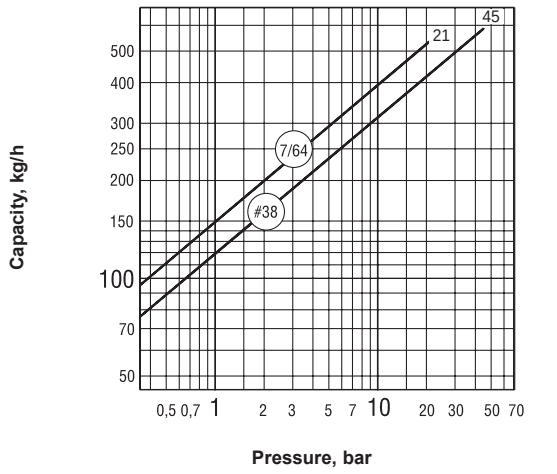

Options

Insu-Pak™

Now you can insulate the in-line traps in your plant without complicating regular trap maintenance. Insu-Pak, a simple reusable insulation package, cuts the time and cost of in-field installation because it goes on in a snap. And it comes off just as easily. The Insu-Pak can prevent trap freeze-up when used with a properly designed condensate manifold. Designed for use with Model 2010 and Model 2011 traps.



Pop Drain

Simple but effective against freeze-up. Properly installed and maintained at low points in your system, the simple, pressure-actuated pop drain opens for condensate drainage at 0,35 barg for Models 2011 and 2022.

Probe Connections are available for trap monitoring on Models 2011 and 2022.

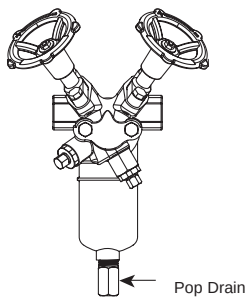

All dimensions and weights are approximate. Use certified print for exact dimensions. Design and materials are subject to change without notice.

20-DC Series Automatic Differential Condensate Controllers

Cast Iron for Vertical Installation

For Pressures to 17 bar...Capacities to 9 000 kg/h

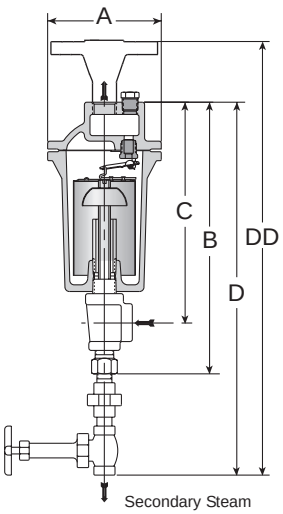



Description

Armstrong automatic differential condensate controllers (DC) are designed to function on applications where condensate must be lifted from a drain point or in gravity drainage applications where increased velocity will aid in condensate drainage.

When lifting from the drain point, often referred to as syphon drainage, the reduction in pressure that occurs when the condensate is elevated causes a portion of it to flash back into steam.

Ordinary steam traps, unable to differentiate between flash steam and live steam, close and impede drainage. Increased velocity with gravity drainage will aid in drawing the condensate and air to the DC. This increased velocity is caused by an internal steam by-pass, controlled by a manual metering valve, so the condensate controller will automatically vent the by-pass or secondary steam. This is then directed to the condensate return line or collected for use in other heat exchangers.

Maximum Operating Conditions

Maximum allowable pressure (vessel design):	17 bar @ 232°C
Maximum operating pressure:	17 bar
Maximum back pressure:	99% of inlet pressure

Connections

Screwed BSPT and NPT
Flanged DIN or ANSI (screw on)

Materials

Body:	ASTM A48 Class 30
Cap:	ASTM A48 Class 30 ASTM A-105 (Only 25-DC if PMO > 9 bar)
Internals:	All stainless steel – 304
Valve and seat:	Hardened chrome steel – 440F
Fittings metering valve:	Metering valve – Bronze with stainless steel trim. Fittings 250# malleable iron

Specification

Automatic differential condensate controller, type ... in cast iron. Maximum allowable back pressure 99% of inlet pressure.

How to Order

- Specify model number
- Specify size and type of pipe connection
- Specify maximum working pressure that will be encountered or orifice size
- Specify any options required

Table ST-114-1. 20-DC Series Bottom Inlet, Top Outlet Differential Condensate Controllers (dimensions in mm)

Model No.	21-DC	22-DC	23-DC	24-DC	25-DC	26-DC
Inlet & Outlet Connections	15	20	25	32	40	50
Secondary Steam Connection	3/8"	1/2"	1/2"	3/4"	3/4"	1"
"A" Flange Diameter	108	133	162	190	216	259
"B" Height of Trap	248	311	394	457	514	597
"C" ℄ Secondary steam to top of trap	197	241	324	381	425	502
"D" Height valve included (screwed)	378	460	543	606	679	787
"DD" Height valve included (flanged PN40*)	393	492	575	669	746	856
Weight in kg (screwed)	3,2	6,4	10,9	17,2	24,0	39,0
Weight in kg (flanged PN40*)	4,7	8,5	13,5	21,4	28,6	45,2

* Other flange sizes, ratings and face-to-face dimensions are available on request.
Shade indicates products that are CE Marked according to the PED (97/23/EC). All the other models comply with the Article 3.3 of the same directive.

All dimensions and weights are approximate. Use certified print for exact dimensions. Design and materials are subject to change without notice.

Armstrong International SA • Parc Industriel des Hauts-Sarts (2e Avenue) • 4040 Herstal • Belgium
Tel.: +32 (0)4 240 90 90 • Fax: +32 (0)4 248 13 61
www.armstrong.be • marketing@armstrong.be

20-DC Series Automatic Differential Condensate Controllers

Cast Iron for Vertical Installation

For Pressures to 17 bar...Capacities to 9 000 kg/h

Table ST-115-1. Model 21-DC Capacity

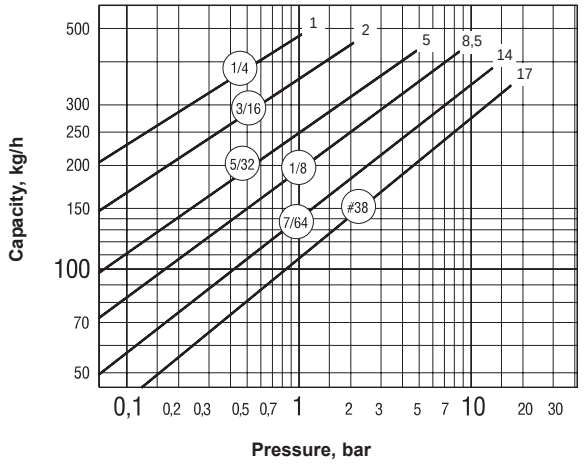

Table ST-115-2. Model 22-DC Capacity

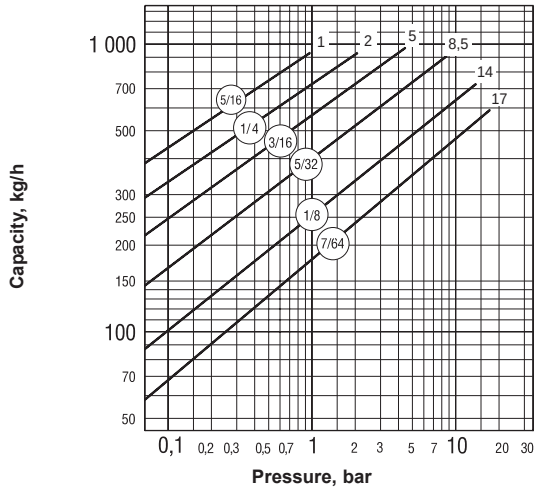

Table ST-115-3. Model 23-DC Capacity

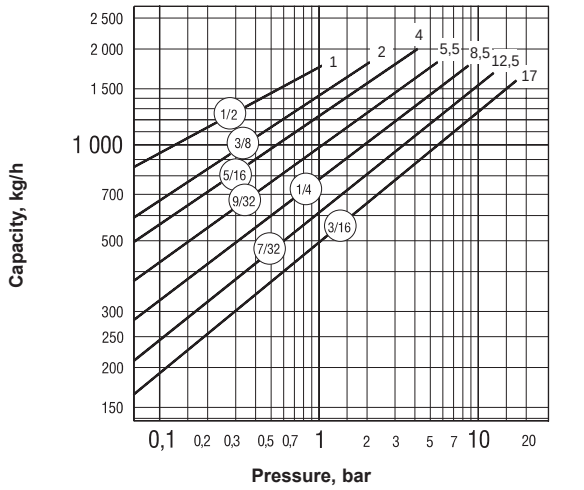

Table ST-115-4. Model 24-DC Capacity

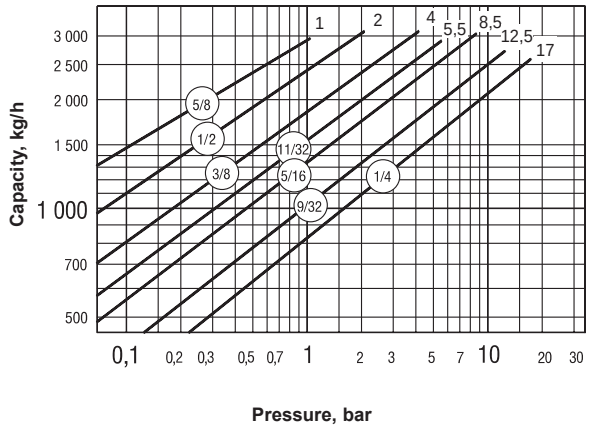

Table ST-115-5. Model 25-DC Capacity

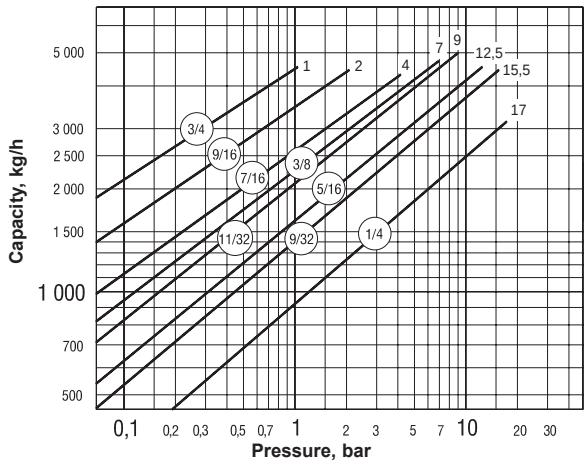

Table ST-115-6. Model 26-DC Capacity

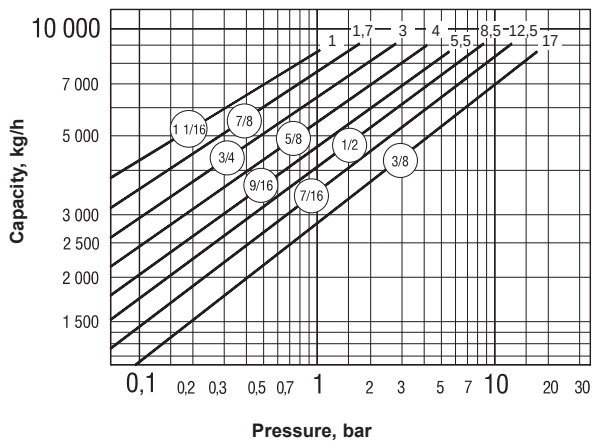

All dimensions and weights are approximate. Use certified print for exact dimensions. Design and materials are subject to change without notice.

80-DC Series Automatic Differential Condensate Controllers

Cast Iron for Horizontal Installation

For Pressures to 17 bar…Capacities to 9 000 kg/h

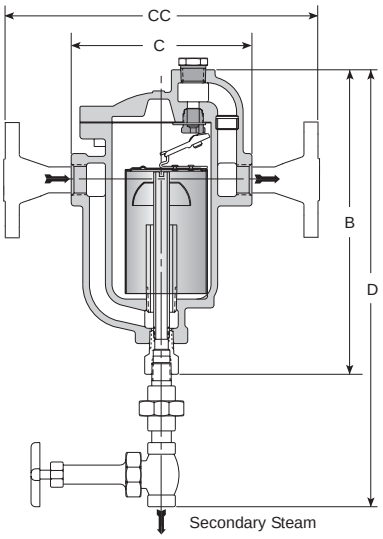



Description

Armstrong automatic differential condensate controllers (DC) are designed to function on applications where condensate must be lifted from a drain point or in gravity drainage applications where increased velocity will aid in condensate drainage.

When lifting from the drain point, often referred to as syphon drainage, the reduction in pressure that occurs when the condensate is elevated causes a portion of it to flash back into steam.

Ordinary steam traps, unable to differentiate between flash steam and live steam, close and impede drainage. Increased velocity with gravity drainage will aid in drawing the condensate and air to the DC. This increased velocity is caused by an internal steam by-pass, controlled by a manual metering valve, so the condensate controller will automatically vent the by-pass or secondary steam. This is then directed to the condensate return line or collected for use in other heat exchangers.

Maximum Operating Conditions

Maximum allowable pressure (vessel design):	17 bar @ 232°C
Maximum operating pressure:	17 bar
Maximum back pressure:	99% of inlet pressure

Connections

Screwed BSPT and NPT
Flanged DIN or ANSI (screw on)

Materials

Body:	ASTM A48 Class 30
Internals:	All stainless steel – 304
Valve and seat:	Hardened chrome steel – 440F
Fittings metering valve:	Metering valve – Bronze with stainless steel trim. Fittings 250# malleable iron.

Specification

Automatic differential condensate controller, type ... in cast iron. Maximum allowable back pressure 99% of inlet pressure.

How to Order

- Specify model number
- Specify size and type of pipe connection
- Specify maximum working pressure that will be encountered or orifice size
- Specify any options required

Table ST-116-1. 80-DC Series Side Inlet, Side Outlet Differential Condensate Controllers (dimensions in mm)

Model No.	81-DC	82-DC	83-DC	84-DC	85-DC	86-DC
Inlet & Outlet Connections	20	20	25	32	50	50
Secondary Steam Connection	3/8"	1/2"	1/2"	3/4"	1"	1 1/2"
"B" Height	203	267	330	381	445	584
"D" Height (valve included)	337	445	476	552	610	813
"C" Face-to-Face (screwed)	127	165	197	229	260	330
"CC" Face-to-Face (flanged PN40*)	191	229	261	355	398	468
Weight in kg (screwed)	3,4	7,9	13,7	21,3	34,0	63,0
Weight in kg (flanged PN40*)	5,3	9,4	15,3	25,5	39,0	69,0

* Other flange sizes, ratings and face-to-face dimensions are available on request.
Shade indicates products that are CE Marked according to the PED (97/23/EC), but PMA for 86-DC is 15 bar. All the other models comply with the Article 3.3 of the same directive.

All dimensions and weights are approximate. Use certified print for exact dimensions. Design and materials are subject to change without notice.

Armstrong International SA • Parc Industriel des Hauts-Sarts (2e Avenue) • 4040 Herstal • Belgium
Tel.: +32 (0)4 240 90 90 • Fax: +32 (0)4 248 13 61
www.armstrong.be • marketing@armstrong.be

80-DC Series Automatic Differential Condensate Controllers

Cast Iron for Horizontal Installation

For Pressures to 17 bar…Capacities to 9 000 kg/h

Table ST-117-1. Model 81-DC Capacity

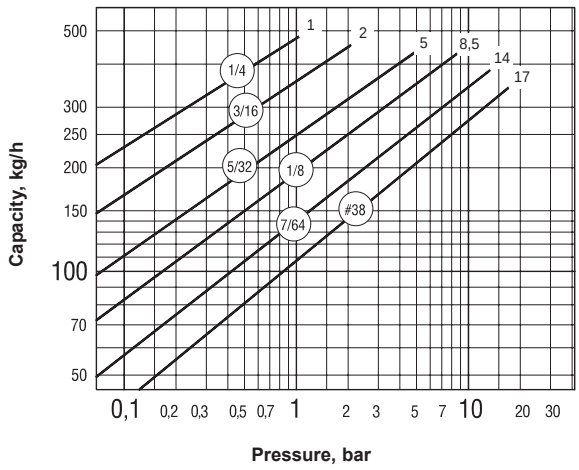

Table ST-117-2. Model 82-DC Capacity

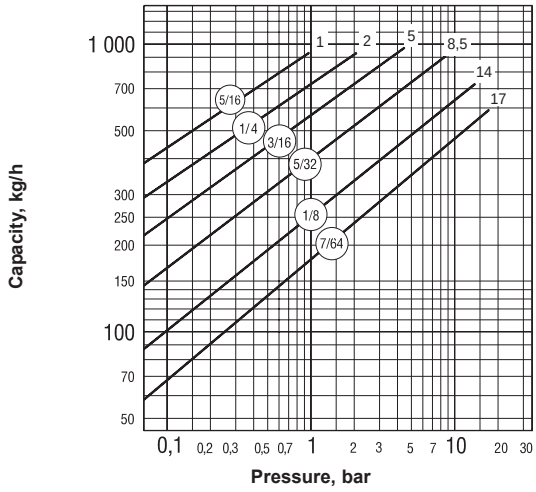

Table ST-117-3. Model 83-DC Capacity

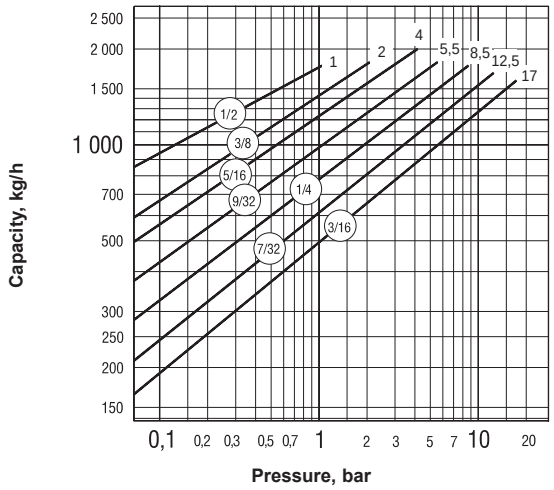

Table ST-117-4. Model 84-DC Capacity

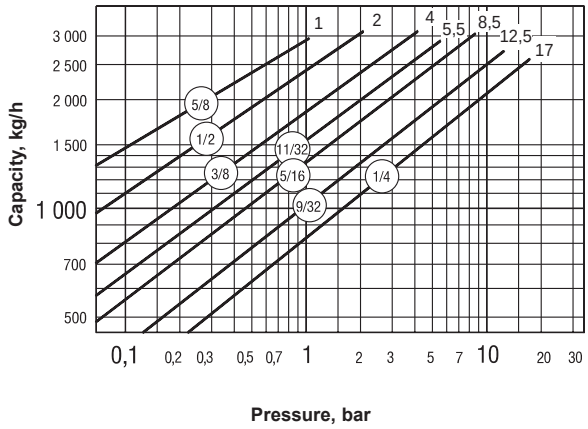

Table ST-117-5. Model 85-DC Capacity

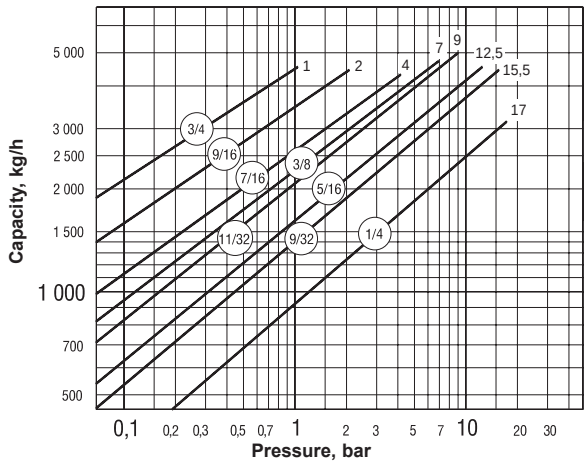

Table ST-117-6. Model 86-DC Capacity

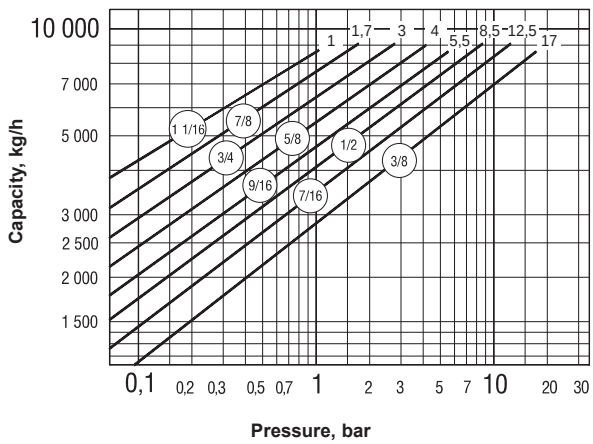

All dimensions and weights are approximate. Use certified print for exact dimensions. Design and materials are subject to change without notice.

The Float & Thermostatic Steam Trap

The More Your Steam Pressure Varies, the More You Need Armstrong F&T Traps

When steam pressure may vary from maximum steam supply pressure to vacuum, Armstrong F&Ts are your most energy-efficient choice. Our line of F&Ts brings Armstrong performance, dependability and long life to trapping services requiring continuous drainage with high air venting capacity. Thanks to separate orifices for condensate and air, they provide continuous condensate drainage and air venting – even under conditions of zero pressure.

All the benefits detailed below have been designed into Armstrong F&Ts through long experience in the manufacture of pressure float-type drain traps. They assure you of optimum operating efficiency for long periods with minimum trouble.

No water seal at inlet

Inlet high on body and condensate discharge valve in the bottom of the body prevent formation of a water seal that could block flow of air to vent under very low pressure conditions.

Optional integral vacuum breaker

Provide maximum protection against freezing and water hammer in condensing equipment under modulated control. They also eliminate another fitting being installed in the line.

Corrosion resistance

Entire float mechanism is made of stainless steel. The float is Heliarc welded to avoid the introduction of dissimilar metals, which could lead to galvanic corrosion and float failure.

High-capacity venting of air and CO_2

Built-in thermostatic air vent discharges large volumes of air and CO_2 through its separate orifice – even under very low pressure conditions.

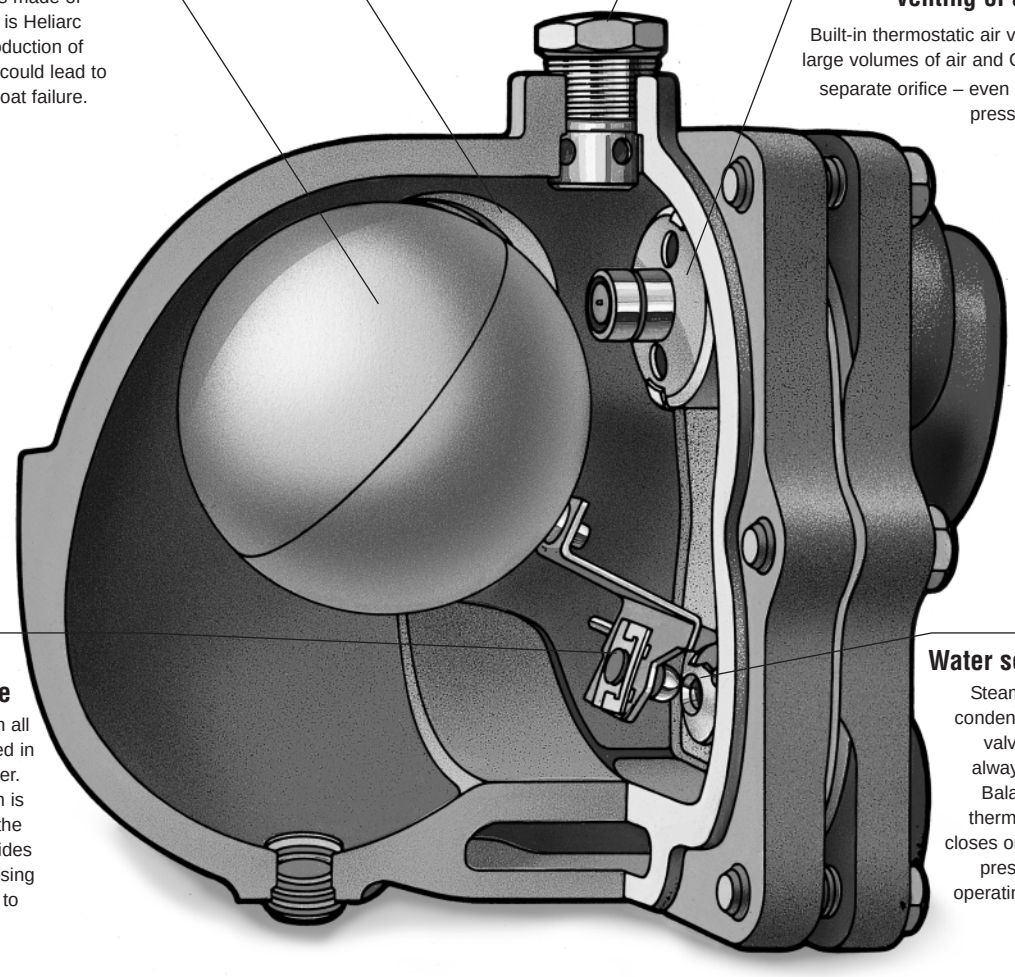

Long life and dependable service

Valve is stainless steel in all sizes. Seat is heat treated in 1 1/2" pipe size and larger. Rugged float mechanism is built to resist wear, and the stainless steel float provides exceptionally high collapsing pressure and resistance to hydraulic shock.

Water sealed valve

Steam cannot reach condensate discharge valve because it is always under water. Balanced pressure thermostatic air vent closes on steam at any pressure within the operating range of the trap.

Operation against back pressure

Trap operation is governed solely by the condensate level in the trap. Back pressure in the return line will not render the trap inoperative as long as there is any pressure differential to force condensate through the discharge valve.

Continuous drainage

No pressure fluctuations due to intermittent condensate drainage. Condensate is discharged at very close to steam temperature. No priming needed.

Armstrong International SA • Parc Industriel des Hauts-Sarts (2e Avenue) • 4040 Herstal • Belgium
Tel.: +32 (0)4 240 90 90 • Fax: +32 (0)4 248 13 61
www.armstrong.be • marketing@armstrong.be

Float & Thermostatic Steam Trap

Built as Tough as the Jobs They Do

Armstrong float and thermostatic traps are unique in their super heavy duty construction. Armstrong uses high quality ASTM A48 Class 30 cast iron or astm A216 WCB cast steel – normally found in pressure vessels rated to 17 bar or 32 bar. Internal mechanisms are made from stainless steel and are heavily reinforced. No brass cotter pins here. Valves and seats are stainless steel, hardened, ground and lapped to withstand the erosive forces of flashing condensate.

Why go to all this trouble on traps normally recommended for low-pressure, modulating service? The answer is in the word modulating. Modulating pressures mean widely varying loads, thermal cycling and high air and non-condensable gas loads.

In other words, tough service. Inferior, lightweight construction is a mistake waiting to happen. Trap failures on modulating pressure may lead to water hammer, corrosion and even heat exchanger damage.

Armstrong's published capacities are based on actual measurements of traps handling hot, flashing condensate. Competitive F&Ts may utilize theoretical calculated capacities. Armstrong uses its own steam lab to give you actual capacity – especially important on high-capacity traps such as those in our ultra-capacity line. Not only does Armstrong offer super heavy duty construction for long life and reliability, but we also supply the data to back up performance. Here's a simple, easy-to-remember summary: The more your pressure varies, the more you need Armstrong F&Ts.



B and BI Series Float & Thermostatic Steam Traps

Cast Iron for Horizontal Installation, with Thermostatic Air Vent

For Pressures to 2 bar...Capacities to 4 040 kg/h

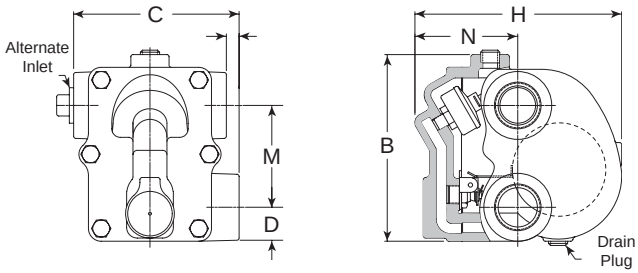

Model B Traps

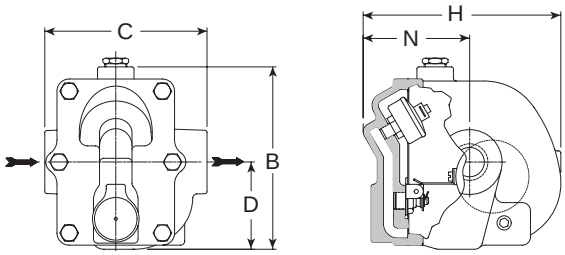

Model BI Traps

Description

Armstrong B and BI Series F&T traps combine high standards of performance and long life with economy for heating service where continuous drainage with high air-venting capacity is required.

Because of the wide use of vacuum returns in systems of this type, the thermostatic air vent element is charged to give it the capability of compensated response to the pressure-temperature curve of steam at any pressure from less than 500 mm Hg vacuum to 2 bar gauge. B and BI Series F&T traps will vent air at slightly below steam temperature throughout this entire range of operation.

All B Series traps, except the 1/2" and 3/4", have inlet connections on both sides of the body to provide flexibility in piping. **The BI Series F&T** traps in sizes 1/2", 3/4" and 1" feature the convenience of in-line connections with the same internals as the B Series.

Maximum Operating Conditions

Maximum allowable pressure (vessel design):
- Model B2-B3: 8,5 bar @ 178°C
- Model B4-B8: 12 bar @ 192°C

Maximum operating pressure:
- 15B, BI: 1 bar saturated steam
- 30B, BI: 2 bar saturated steam

Maximum back pressure: 99% of inlet pressure

Note: Cast iron traps should not be used in systems where freezing, excessive hydraulic or thermal shock are present.

Connections

Screwed BSPT and NPT
Flanged DIN or ANSI (screw on) on request

Materials

Body and cap:	ASTM A48 Class 30
Internals:	All stainless steel – 304
Valve:	Stainless steel – 303 or 440
Seat:	Stainless steel – 303 (ASTM A582) Stainless steel – 440F in 1-1/2" and 2"
Thermostatic air vent:	Stainless steel and bronze with phosphor bronze bellows, caged in stainless steel

Options

Integral vacuum breaker. Add suffix VB to model number.

CAUTION: Do not use a conventional vacuum breaker open to the atmosphere in any system that incorporates a mechanical return system that carries pressure less than atmospheric pressure. This includes all return systems designated as vacuum returns, variable vacuum returns or subatmospheric returns. If a vacuum breaker must be installed in such a system, it should be of the type that is loaded to open only when the vacuum reaches a calibrated level well in excess of the design characteristics of the system.

Specification

Float and thermostatic steam trap, type ... in cast iron, with thermostatic air vent. Maximum allowable back pressure 99% of inlet pressure.

How to Order

Pressure	Model	Connection Size	Option
15	B	2	VB
15 = 1 bar 30 = 2 bar	B = Standard Connection	2 = DN15 3 = DN20 4 = DN25 5 = DN32 6 = DN40 8 = DN50	VB = Vacuum Breaker
	BI = In-line Connection	2 = DN15 3 = DN20 4 = DN25	

Table ST-120-1. B Series Side Inlet, Side Outlet and BI Series In-Line Trap (dimensions in mm)

Model No.	B					BI
Pipe Connections	15 – 20	25	32	40	50	15 – 20 – 25
"B" Height	124	140	140	189	244	143
"C" Face-to-Face (screwed)	98	124	117	146	194	127
"D" Bottom to ℄	22,2	25,4	31,0	36,5	42,9	68,0
"H" Width	137	152	197	214	295	168
"K" Connection Offset	3,2	9,5	–	–	–	–
"M" ℄ to ℄	69,8	76,2	76,2	106,0	152,0	–
"N" Top to ℄	65,1	76,2	85,7	95,2	127,0	83,0
Weight in kg (screwed)	2,7	3,9	5,0	8,6	18,1	4,4

Shade indicates products that are CE Marked according to the PED (97/23/EC). All the other sizes comply with the Article 3.3 of the same directive.

All dimensions and weights are approximate. Use certified print for exact dimensions. Design and materials are subject to change without notice.

Armstrong International SA • Parc Industriel des Hauts-Sarts (2e Avenue) • 4040 Herstal • Belgium
Tel.: +32 (0)4 240 90 90 • Fax: +32 (0)4 248 13 61
www.armstrong.be • marketing@armstrong.be

B and BI Series Float & Thermostatic Steam Traps

Cast Iron for Horizontal Installation, with Thermostatic Air Vent

For Pressures to 2 bar...Capacities to 4 040 kg/h

Table ST-121-1. B & BI Series Capacity – 1 bar

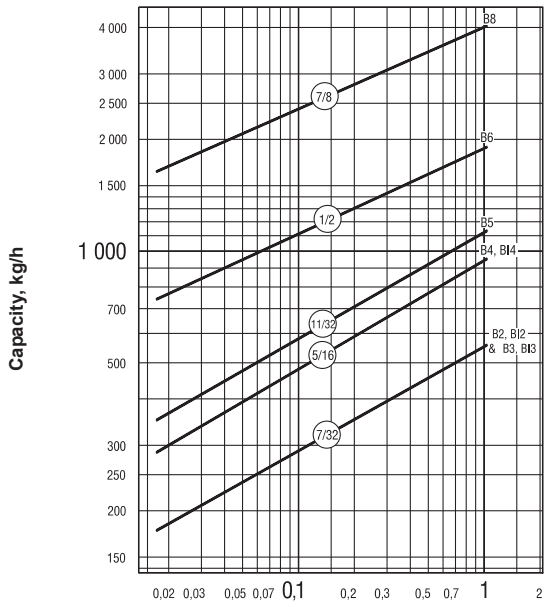

Table ST-121-2. B & BI Series Capacity – 2 bar

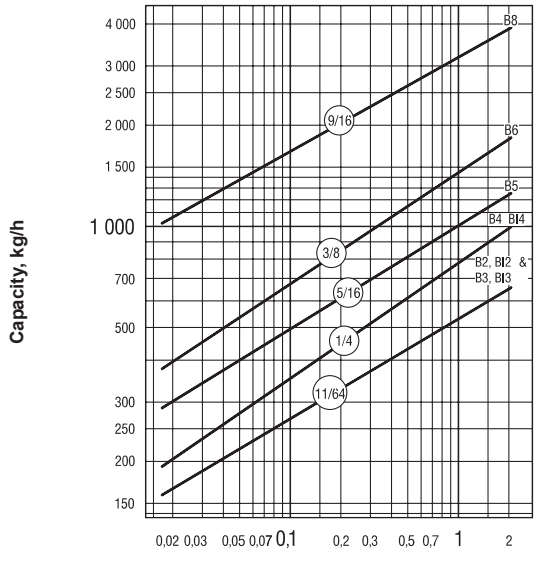

Options

Vacuum Breaker – 3/8" and 1/2" NPT

Many times, condensate will be retained ahead of steam traps because of the presence of a vacuum. To break a vacuum, air must be introduced into the system by means of a vacuum breaker.

For maximum protection against freezing and water hammer in condensing equipment under modulated control, vacuum breakers are recommended. Armstrong B and BI Series F&T traps are available with integral vacuum breakers. Maximum pressure is 10 bar.

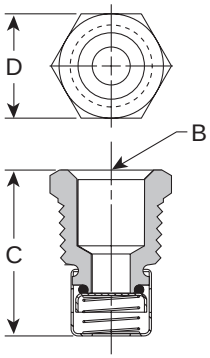

Table ST-121-3. Vacuum Breaker (dimensions in mm)

Size	1/2" NPT	3/8" NPT
"B" Pipe Connections	3/8"	1/4"
"C" Height	30	28
"D" Width	22 Hex	17 Hex

All dimensions and weights are approximate. Use certified print for exact dimensions. Design and materials are subject to change without notice.

A & AI Series Float & Thermostatic Steam Traps

Cast Iron for Horizontal Installation, with Thermostatic Air Vent

For Pressures to 12 bar...Capacities to 3 900 kg/h

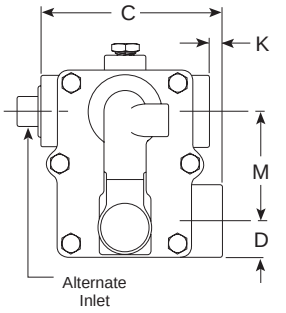

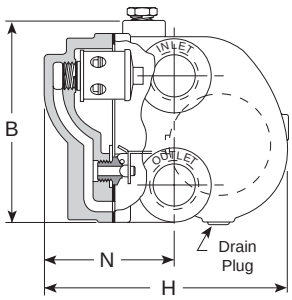

Model A Traps

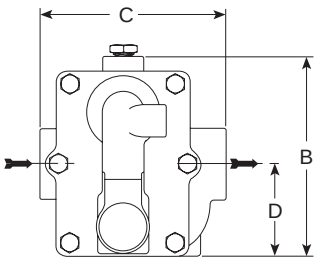

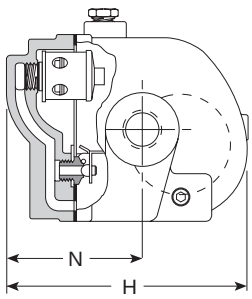

Model AI Traps

Description

Armstrong A & AI Series F&T traps are for industrial service from 0 to 12 bar and feature a balanced pressure phosphor-bronze type bellows caged in stainless steel. Armstrong A & AI Series F&T traps are designed for service on heat exchange equipment where there is a need to vent air and non-condensable gases quickly.

The AI Series F&T traps feature the convenience of in-line connections with the same rugged internals found in the A Series.

Maximum Operating Conditions

Maximum allowable pressure (vessel design): 12 bar @ 192°C

Maximum operating pressure:

Model 30-A, AI:	2 bar saturated steam
Model 75-A, AI:	5 bar saturated steam
Model 125-A, AI:	8,5 bar saturated steam
Model 175-A, AI:	12 bar saturated steam

Maximum back pressure: 99% of inlet pressure

Note: Cast iron traps should not be used in systems where freezing, excessive hydraulic or thermal shock are present.

Connections

Screwed BSPT and NPT
Flanged DIN or ANSI (screw on) on request

Materials

Body and cap:	ASTM A48 Class 30
Internals:	All stainless steel – 304
Valve:	Stainless steel – 440
Seat:	Stainless steel – 303 (ASTM A582) Stainless steel – 440F in 1 1/2" and 2"
Thermostatic air vent:	Stainless steel and bronze with phosphor bronze bellows, caged in stainless steel

Options

Integral vacuum breaker. Add suffix VB to model number.

CAUTION: Do not use a conventional vacuum breaker open to the atmosphere in any system that incorporates a mechanical return system that carries pressure less than atmospheric pressure. This includes all return systems designated as vacuum returns, variable vacuum returns or subatmospheric returns. If a vacuum breaker must be installed in such a system, it should be of the type that is loaded to open only when the vacuum reaches a calibrated level well in excess of the design characteristics of the system.

Specification

Float and thermostatic steam trap, type ... in cast iron, with thermostatic air vent. Maximum allowable back pressure 99% of inlet pressure.

How to Order

Pressure	Model	Connection Size	Option
75	AI	2	VB
30 = 2 bar 75 = 5 bar 125 = 8,5 bar 175 = 12 bar	A = Standard Connection	3 = DN20 4 = DN25 5 = DN32 6 = DN40 8 = DN50	VB = Vacuum Breaker
	AI = In-line Connection	2 = DN15 3 = DN20 4 = DN25	

Table ST-122-1. A Series Side Inlet, Side Outlet and AI Series In-Line Trap (dimensions in mm)

Model No.	A					AI
Pipe Connections	20	25	32	40	50	15 – 20 – 25
"B" Height	130	130	148	189	248	140
"C" Face-to-Face (screwed)	124	124	117	146	194	127
"D" Bottom to ℄	25,4	25,4	31,0	35,7	42,9	65,1
"H" Width	164	164	206	214	295	165
"K" Connection Offset	95,2	95,2	–	–	–	–
"M" ℄ to ℄	76,2	76,2	76,2	106,0	152,0	–
"N" Top to ℄	85,7	85,7	95,2	95,2	127,0	93,7
Weight in kg (screwed)	4,3	3,7	5,0	8,5	18,1	4,4

Shade indicates products that are CE Marked according to the PED (97/23/EC). All the other sizes comply with the Article 3.3 of the same directive.

All dimensions and weights are approximate. Use certified print for exact dimensions. Design and materials are subject to change without notice.

Armstrong International SA • Parc Industriel des Hauts-Sarts (2e Avenue) • 4040 Herstal • Belgium
Tel.: +32 (0)4 240 90 90 • Fax: +32 (0)4 248 13 61
www.armstrong.be • marketing@armstrong.be

A & AI Series Float & Thermostatic Steam Traps

Cast Iron for Horizontal Installation, with Thermostatic Air Vent

For Pressures to 12 bar...Capacities to 3 900 kg/h

Table ST-123-1. A & AI Series Capacity – 2 bar

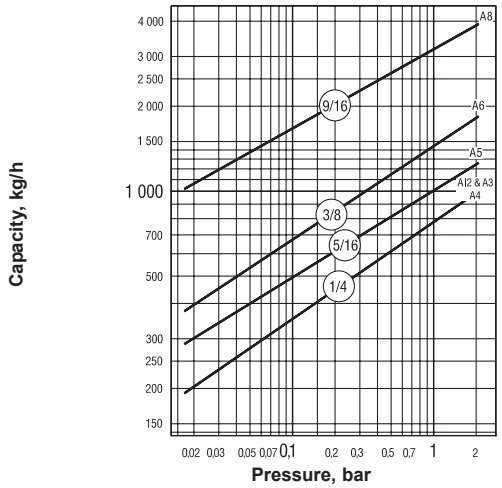

Table ST-123-2. A & AI Series Capacity – 5 bar

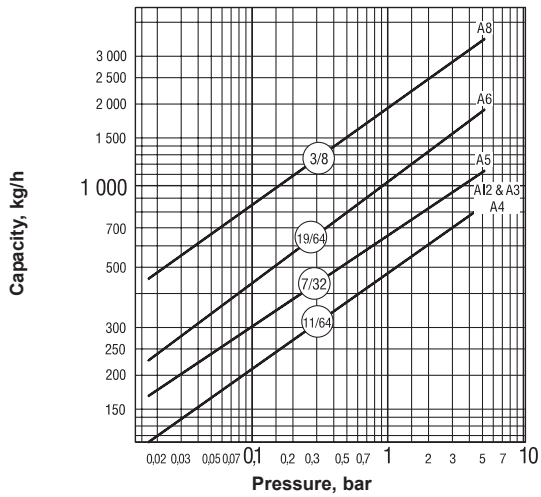

Table ST-123-3. A & AI Series Capacity – 8,5 bar

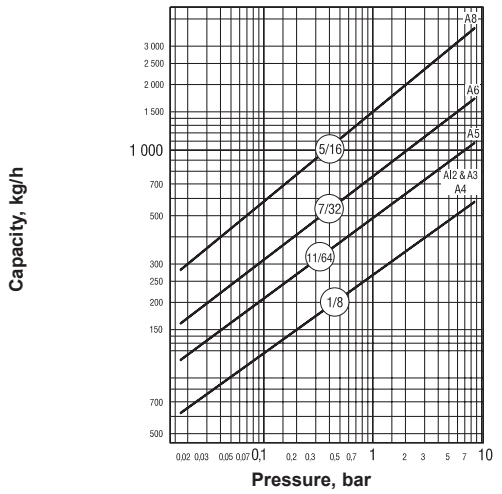

Table ST-123-4. A & AI Series Capacity – 12 bar

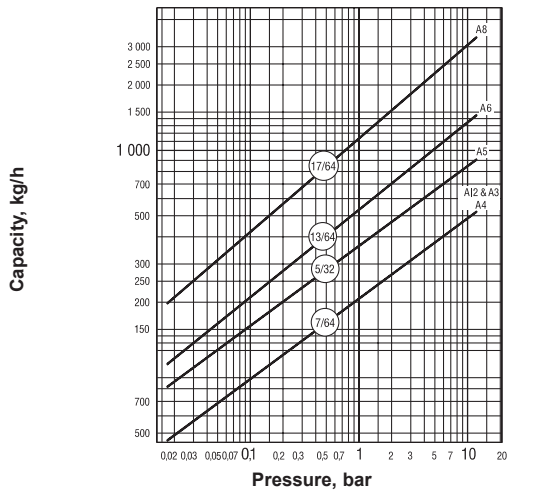

Options

Vacuum Breaker – 3/8" and 1/2" NPT

Many times, condensate will be retained ahead of steam traps because of the presence of a vacuum. To break a vacuum, air must be introduced into the system by means of a vacuum breaker.

For maximum protection against freezing and water hammer in condensing equipment under modulated control, vacuum breakers are recommended. Armstrong A and AI Series F&T Traps are available with integral vacuum breakers. Maximum service pressure is 10 bar.

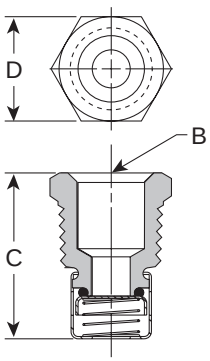

Table ST-123-5. Vacuum Breaker (dimensions in mm)

Size	1/2" NPT	3/8" NPT
"B" Pipe Connections	3/8"	1/4"
"C" Height	30	28
"D" Width	22 Hex	17 Hex

All dimensions and weights are approximate. Use certified print for exact dimensions. Design and materials are subject to change without notice.

J & K Series Ultra-Capacity Float & Thermostatic Steam Traps

Cast Iron for Horizontal Installation, with Thermostatic Air Vent

For Pressures to 12 bar...Capacities to 47 700 kg/h

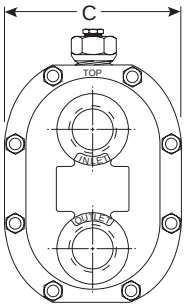

Series J & K Cap

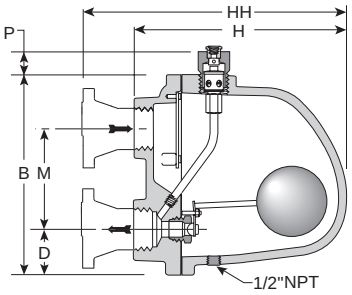

Series J, F&T Shown

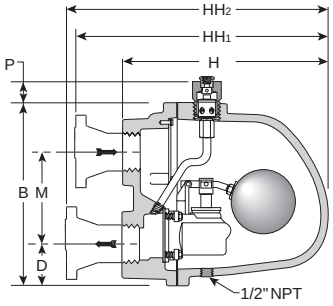

Series K, F&T Shown

Description

The simple, yet rugged, cast iron construction of the J & K Series Ultra-Capacity F&T steam traps offers long, trouble-free service. All floats, valves and seats, and lever mechanisms are constructed of stainless steel.

The integral thermostatic air vent is a balanced-pressure phosphor bronze bellows caged in stainless steel. It is designed especially for heavy-duty industrial applications where highly efficient, uninterrupted service is essential. This balanced-pressure-type air vent will respond to the pressure-temperature curve of steam at any pressure from zero to 12 bar. Thus – up to 12 bar – air is vented at slightly below steam temperature.

Maximum Operating Conditions

Maximum allowable pressure (vessel design):

Model J:	12 bar @ 232°C
Model K:	12 bar @ 232°C

Maximum operating pressure:

Model 15-J:	1 bar saturated steam
Model 30-J:	2 bar saturated steam
Model 75-J:	5 bar saturated steam
Model 125-J:	8,5 bar saturated steam
Model 175-J:	12 bar saturated steam
Model 50-K:	3,5 bar saturated steam

Maximum back pressure: 99% of inlet pressure
Maximum operating temperature bellows: 217°C

Note: Cast iron traps should not be used in systems where freezing, excessive hydraulic or thermal shock are present.

Connections

Screwed BSPT and NPT
Flanged DIN or ANSI (screw on)

Materials

Body and cap:	ASTM A48 Class 30
Internals:	All stainless steel – 304
Valve(s) and seat(s):	Stainless steel
Drain plug:	Carbon steel
Thermostatic air vent:	Stainless steel and bronze with phosphor bronze bellows, caged in stainless steel

Options

- Integral vacuum breaker 10 bar maximum. Add suffix VB to model number
- No internal thermostatic air vent for liquid drainer service. Add suffix LD to model number
- ntegral flash release for syphon drainage service. Add suffix CC to model number

Specification

Float and thermostatic steam trap, type ... in cast iron, with thermostatic air vent. Maximum allowable back pressure 99% of inlet pressure.

How to Order

Pressure	Model	Connection Size	Option
75	J	8	VB
15 = 1 bar 30 = 2 bar 75 = 5 bar 125 = 8,5 bar 175 = 12 bar	J	8 = DN50	VB = Vacuum Breaker LD = Liquid Drainer CC = Condensate Controller
50 = 3,5 bar	K	10 = DN65	

Special Configurations

Condensate controller with flash release for syphon drainage and/or cascade service. The condensate controller (CC) configuration was developed especially to meet very large capacity needs in applications where condensate must be lifted from the drain point to the trap. Under such conditions – often referred to as syphon drainage – the reduction in pressure that occurs when the condensate is elevated causes a portion of the condensate to flash into steam. Ordinary traps, unable to differentiate between flash steam and live steam, close and impede drainage.

The J & K Series condensate controllers (CC) are equipped with a fixed, restricted orifice near the top of the body to bleed off the flash steam (and all air present). This permits the trap to function properly on condensate.

Liquid drainer with back vent for exceptionally high-capacity drainage of liquid from gas under pressure. The liquid drainer (LD) configuration was developed to meet very large capacity needs in draining water and other liquids from air or other gases under pressure. To prevent air or gas binding, the access port in the top of the body serves as a back vent connection to the equipment being drained. For capacity data, see pages LD-361 and LD-384 or consult your Armstrong Representative.

Table ST-124-1. J and K Series Side Inlet, Side Outlet Trap

Model No.	J	K
Pipe Connections	50	65
"B" Height	332	332
"C" Width	246	246
"H" Face-to-Face (screwed)	348	373
"HH1" Inlet Face-to-Face (flanged PN40*)	420	448
"HH2" Outlet Face-to-Face (flanged PN40*)	420	548
"D" Bottom to ℄	74,6	74,6
"M" ℄ to ℄	168	168
"P" Trap top to VB top	46	46
Weight in kg (screwed)	36,3	39,5
Weight in kg (flanged PN40*)	45	49

Dimensions in mm

* Other flange sizes, ratings and face-to-face dimensions are available on request.

Shade indicates model that is CE Marked according to the PED (97/23/EC). The other model complies with Article 3.3 of the same directive, but PMA is 7 bar.

All dimensions and weights are approximate. Use certified print for exact dimensions. Design and materials are subject to change without notice.

Armstrong International SA • Parc Industriel des Hauts-Sarts (2e Avenue) • 4040 Herstal • Belgium
Tel.: +32 (0)4 240 90 90 • Fax: +32 (0)4 248 13 61
www.armstrong.be • marketing@armstrong.be

J & K Series Ultra-Capacity Float & Thermostatic Steam Traps

Cast Iron for Horizontal Installation, with Thermostatic Air Vent

For Pressures to 12 bar...Capacities to 47 700 kg/h

Table ST-125-1. J Series Capacity

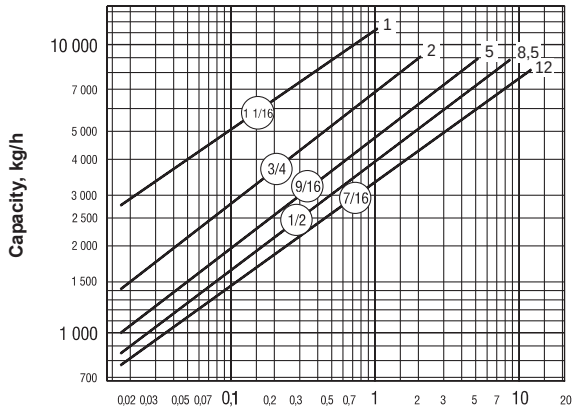

Table ST-125-2. K Series Capacity

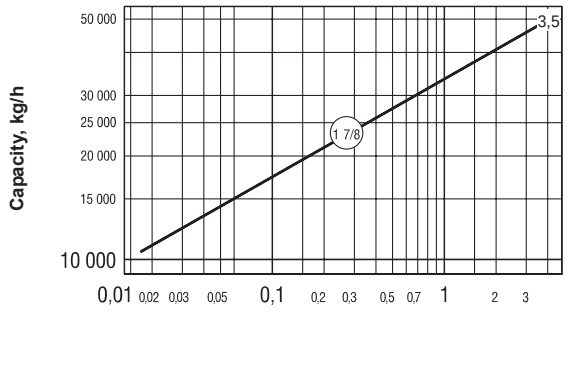

Options

Vacuum Breaker – 3/8" and 1/2" NPT

Many times, condensate will be retained ahead of steam traps because of the presence of a vacuum. To break a vacuum, air must be introduced into the system by means of a vacuum breaker.

For maximum protection against freezing and water hammer in heating coils under modulated control, for example, vacuum breakers are recommended in conjunction with freeze protection devices.

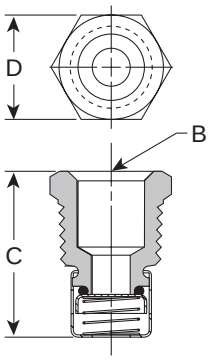

Table ST-125-2. Vacuum Breaker (dimensions in mm)

Size	1/2" NPT	3/8" NPT
"B" Pipe Connections	3/8"	1/4"
"C" Height	30	28
"D" Width	22 Hex	17 Hex

All dimensions and weights are approximate. Use certified print for exact dimensions. Design and materials are subject to change without notice.

L & M Series Ultra-Capacity Float & Thermostatic Steam Traps

Cast Iron for Horizontal Installation, with Thermostatic Air Vent

For Pressures to 17 bar...Capacities to 94 350 kg/h

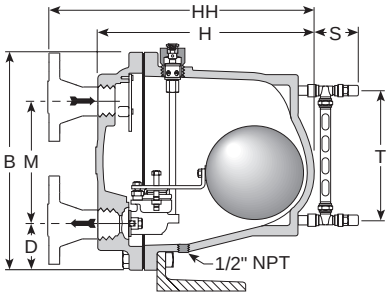

Series L, F&T Shown

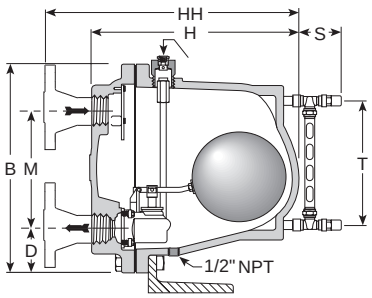

Series M, CC Shown

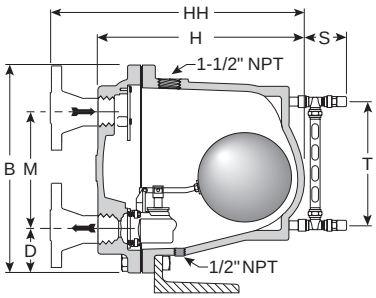

Series M, LD Shown

Description

The simple yet rugged cast iron construction of the L & M Series Ultra-Capacity F&T steam traps offers long, trouble-free service. All floats, valves and seats, and lever mechanisms are constructed of stainless steel.

The integral thermostatic air vent is a balanced-pressure phosphor bronze bellows caged in stainless steel. It is designed especially for heavy-duty industrial applications where highly efficient, uninterrupted service is essential. This balanced pressure type air vent will respond to the pressure-temperature curve of steam at any pressure from zero to 17 bar. Thus – up to 17 bar – air is vented at slightly below steam temperature.

Maximum Operating Conditions

Maximum allowable pressure (vessel design):

Model L: 17 bar @ 232°C
Model M: 17 bar @ 232°C

Maximum operating pressure:

Model 30-L: 2 bar saturated steam
Model 100-L: 7 bar saturated steam
Model 150-L: 10 bar saturated steam
Model 250-L: 17 bar saturated steam
Model 250-M: 17 bar saturated steam

Maximum back pressure: 99% of inlet pressure
Maximum operating temperature bellows: 217°C

Note: Cast iron traps should not be used in systems where freezing, excessive hydraulic or thermal shock are present.

Connections

Screwed BSPT and NPT
Flanged DIN or ANSI (screw on)

Materials

Body and cap:	ASTM A48 Class 30
Internals:	All stainless steel – 304
Valve(s) and seat(s):	Stainless steel
Drain plug:	Carbon steel
Thermostatic air vent:	Stainless steel and bronze with phosphor bronze bellows, caged in stainless steel

Options

- Integral vacuum breaker 10 bar maximum. Add suffix VB to model number
- No internal thermostatic air vent for liquid drainer service. Add suffix LD to model number
- Integral flash release for syphon drainage service. Add suffix CC to model number
- Armored gauge glass 17 bar @ 218°C
- L and M Series available with floor mounting bracket. Consult factory.

Specification

Float & thermostatic steam trap, type ... in cast iron, with thermostatic air vent. Maximum allowable back pressure 99% of inlet pressure.

How to Order

Pressure	Model	Connection Size	Option
250	M	12	GG
30 = 2 bar 100 = 7 bar 150 = 10,5 bar 250 = 17 bar	L	8 = DN50 10 = DN65	VB = Vacuum Breaker LD = Liquid Drainer CC = Condensate Controller G/G = Gage Glass
250 = 17 bar	M	12 = DN80	

Special Configurations

Condensate controller with flash release for syphon drainage and/or cascade service. The condensate controller (CC) configuration was developed especially to meet very large capacity needs in applications where condensate must be lifted from the drain point to the trap. Under such conditions – often referred to as syphon drainage – the reduction in pressure that occurs when condensate is elevated causes a portion of the condensate to flash into steam. Ordinary traps, unable to differentiate between flash steam and live steam, close and impede drainage.

The L & M Series condensate controllers (CC) are equipped with a fixed, restricted orifice near the top of the body to bleed off the flash steam (and all air present). This permits the trap to function properly on condensate.

Liquid drainer with back vent for exceptionally high capacity drainage of liquid from gas under pressure. The liquid drainer (LD) configuration was developed to meet very large capacity needs in draining water and other liquids from air or other gases under pressure. To prevent air or gas binding, the access port in the top of the body serves as a back vent connection to the equipment being drained. For capacity data, see pages LD-361 and LD-384 or consult your Armstrong Representative.

Table ST-126-1. L and M Series Side Inlet, Side Outlet Trap

Model No.	L		M
Pipe Connections	50	65	80
"B" Height	514		514
"C" Width (not shown on drawing)	375		375
"D" Bottom to ℄	106		106
"H" Face-to-Face (screwed)	502		502
"HH" Face-to-Face (flanged PN40*)	574	580	583
"M" ℄ to ℄	287		287
"S" Gauge Glass Width	95,2		95,2
"T" Gauge Glass Height	305		305
Weight in kg (screwed)	88,9		88,9
Weight in kg (flanged PN40*)	97	99	101

Dimensions in mm

* Other flange sizes, ratings and face-to-face dimensions are available on request.

All models comply with article 3.3 of the PED (97/23/EC), but PMA is 11 bar.

All dimensions and weights are approximate. Use certified print for exact dimensions. Design and materials are subject to change without notice.

Armstrong International SA • Parc Industriel des Hauts-Sarts (2e Avenue) • 4040 Herstal • Belgium
Tel.: +32 (0)4 240 90 90 • Fax: +32 (0)4 248 13 61
www.armstrong.be • marketing@armstrong.be

L & M Series Ultra-Capacity Float & Thermostatic Steam Traps

Cast Iron for Horizontal Installation, with Thermostatic Air Vent

For Pressures to 17 bar...Capacities to 94 350 kg/h

Table ST-127-1. L Series Capacity

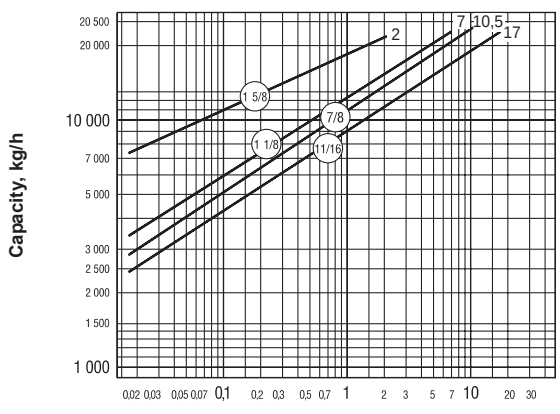

Table ST-127-2. M Series Capacity

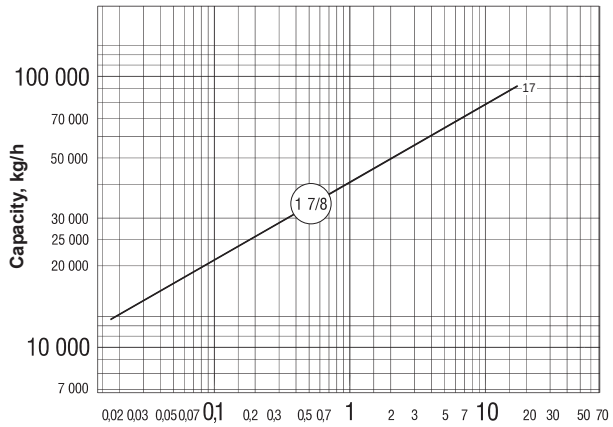

Installation Notes

Under conditions where the load may approach the maximum capacity of the trap, it is recommended that the size of the discharge line be increased one size as close to the trap cap as is practical. When L and M Series units are used in severe service conditions or at pressures exceeding 2 bar, use an anchoring bracket or other supportive measures to minimize stress on piping.

Ultra-Capacity L and M Series units MUST BE WARMED UP in the proper sequence and gradually. Recommended warm-up rate – not to exceed 55°C/8 minutes.

See your Armstrong Representative.

Vacuum Breaker – 3/8" and 1/2" NPT

Many times, condensate will be retained ahead of steam traps because of the presence of a vacuum. To break a vacuum, air must be introduced into the system by means of a vacuum breaker.

For maximum protection against freezing and water hammer in heating coils under modulated control, for example, vacuum breakers are recommended in conjunction with freeze protection devices.

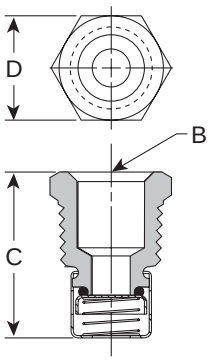

Table ST-127-2. Vacuum Breaker (dimensions in mm)

Size	1/2" NPT	3/8" NPT
"B" Pipe Connections	3/8"	1/4"
"C" Height	30	28
"D" Width	22 Hex	17 Hex

All dimensions and weights are approximate. Use certified print for exact dimensions. Design and materials are subject to change without notice.

CS Series Float & Thermostatic Steam Traps

Carbon Steel for Horizontal or Vertical Installation, with Thermostatic Air Vent

For Pressures to 32 bar...Capacities to 6 030 kg/h

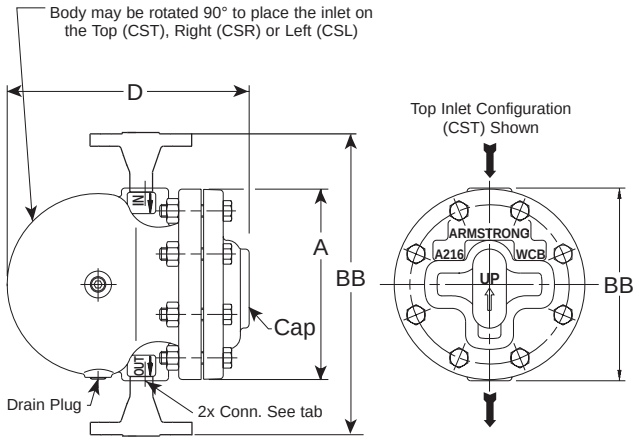



Description

The simple yet rugged construction of the CS Series Carbon Steel Float and Thermostatic Trap is designed to assure long, trouble-free service. The CS Series offers horizontal or vertical piping configurations from the same trap. Additionally, in-line repairability is very easy because the cap and mechanism detach quickly while the body stays in-line. For added versatility a full range of connection sizes are offered 1/2" through 2" in NPT, socketweld and flanged.

Benefits

- Horizontal or Vertical piping arrangements are available from the same trap
- Inlet and outlet connections are in the body for easy in-line repairability
- More connection sizes available

Maximum Operating Conditions

Maximum allowable pressure (vessel design):	41 bar @ 343°C
Maximum operating pressure:	32 bar
Maximum back pressure:	99% of inlet pressure

Materials

Body and Cap:	ASTM A216 WCB
Internals:	All stainless steel
Valve(s) and Seat(s):	Stainless steel
Drain Plug:	Carbon steel
Thermostatic Air Vent:	Wafer type stainless steel with Hastelloy element

Connections

Screwed BSPT and NPT
Socketweld
Flanged DIN or ANSI (welded)

Specification

Steam traps shall be float and thermostatic type having carbon steel cap and body, stainless steel valve and seat and stainless steel float. Piping connections shall be in the trap body and shall be capable of being horizontal with the inlet on either side or vertical with the inlet on top. Cap with mechanism shall be completely removable without disturbing the piping. Integral thermostatic element shall be wafer type constructed of Hastelloy and stainless steel. Thermostatic element shall be capable of withstanding 7,2°C of superheat and resistant to water hammer damage. Maximum allowable back pressure 99% of inlet pressure.

How to Order

Pressure	Model	Inlet Flow Direction	Connection Size	Connection Type
*	CS	T	2	NPT
*	CS = Carbon Steel	T = Vertical Top Inlet R = Horizontal Right Inlet L = Horizontal Left Inlet	2 = DN15 3 = DN20 4 = DN25 5 = DN32 6 = DN40 8 = DN50	NPT, SW and Flanged (Specify Flange Type and Rating)

* Refer to capacity charts for maximum operating pressures

Table ST-128-1. CS Series Steam Trap (dimensions in mm)

Model No.	CS					
Pipe Connections	15 - 20		25 - 32		40 - 50	
"A" Flange Diameter	170		206		274	
"B" Face-to-Face (screwed & SW)	172		212		290	
"BB" Face-to-Face (flanged PN40*)	252	256	296	300	384	390
"D" Overall Length	216		255		362	
Weight in kg (screwed & SW)	13		20		45	
Weight in kg (flanged PN40*)	14,5	15,1	22,6	24,2	49,6	51,2

* Other flange sizes, ratings and face-to-face dimensions are available on request.
All models are CE Marked according to the PED (97/23/EC).

All dimensions and weights are approximate. Use certified print for exact dimensions. Design and materials are subject to change without notice.

Armstrong International SA • Parc Industriel des Hauts-Sarts (2e Avenue) • 4040 Herstal • Belgium
Tel.: +32 (0)4 240 90 90 • Fax: +32 (0)4 248 13 61
www.armstrong.be • marketing@armstrong.be

CS Series Float & Thermostatic Steam Traps

Carbon Steel for Horizontal or Vertical Installation, with Thermostatic Air Vent

For Pressures to 32 bar...Capacities to 6 000 kg/h

Table ST-129-1. CS Series Capacity 1/2" & 3/4"

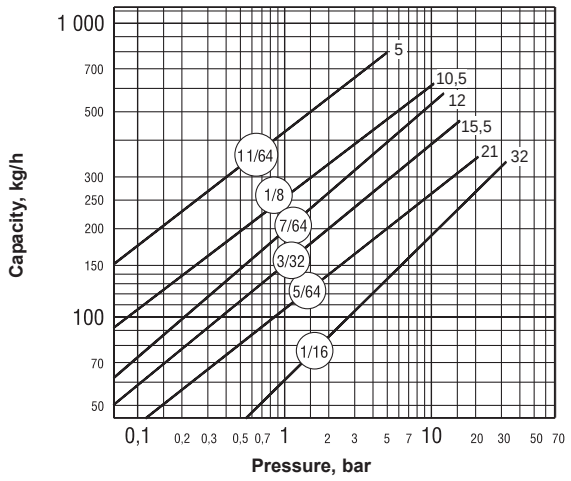

Table ST-129-2. CS Series Capacity 1" & 1 1/4"

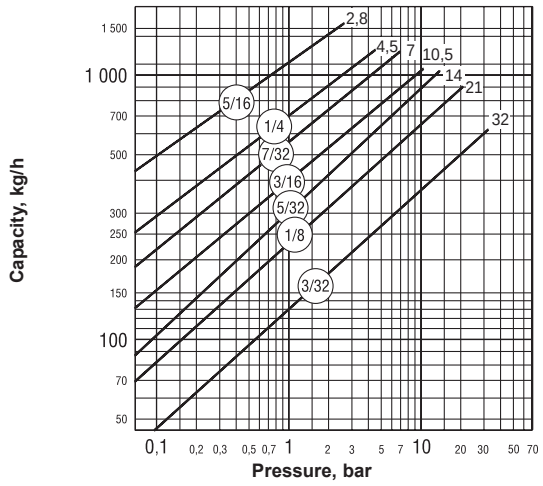

Table ST-129-3. CS Series Capacity 1 1/2" & 2"

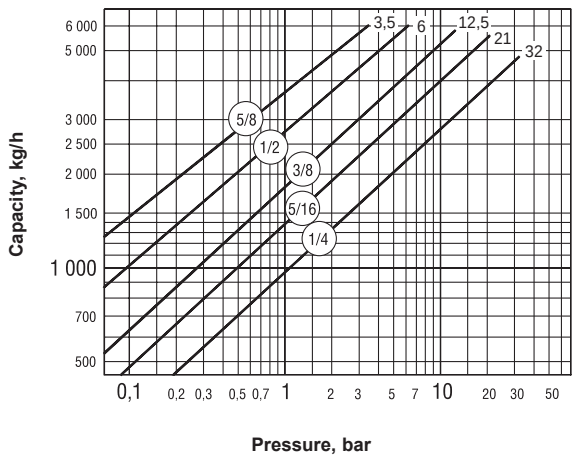

When suitable, floats are chosen to maximize the operating pressure and/or the capacity. Therefore, please observe the following limits when conducting a hydrostatic test:

Table ST-129-4. Maximum Hydrostatic Test

Model	Orifice Size	Maximum Hydrostatic Test in bar
CS-2, CS-3	All	44
CS-4, CS-5	3/32" - 7/64"	48
	5/32" - 11/64" - 7/32"	39
	1/4" - 5/16"	19
CS-6, CS-8	All	48

All dimensions and weights are approximate. Use certified print for exact dimensions. Design and materials are subject to change without notice.

LS & MS Series Ultra-Capacity Float & Thermostatic Steam Traps

Cast Steel for Horizontal Installation, with Thermostatic Air Vent

For Pressures to 31 bar...Capacities to 127 000 kg/h

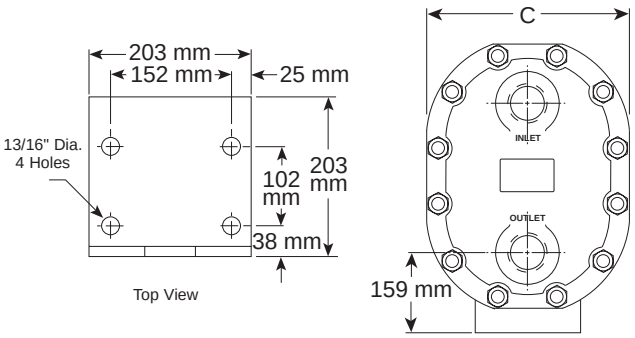

LS and MS Floor Mounting Bracket

Table ST-130-1. LS and MS Series Side Inlet, Side Outlet Trap			
Model No.	**LS & MS**		
Pipe Connections	50	65	80
"B" Height	508		
"C" Width (not shown on drawing)	387		
"D" Bottom to ℄	106		
"H" Face-to-Face (screwed & SW)	508		
"HH" Face-to-Face (flanged PN40*)	553	557	563
"M" ℄ to ℄	287		
"S" Gauge Glass Width	95,2		
"T" Gauge Glass Height	305		
Weight in kg (screwed & SW)	131,5		
Weight in kg (flanged PN40*)	137,5	140,5	143,5

Dimensions in mm

* Other flange sizes, ratings and face-to-face dimensions are available on request.

All models are CE Marked according to the PED (97/23/EC).

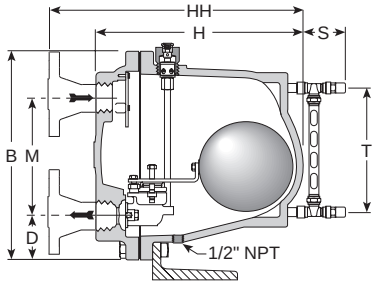

Series LS, F&T Shown

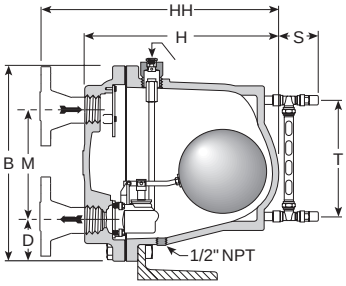

Series MS, CC Shown

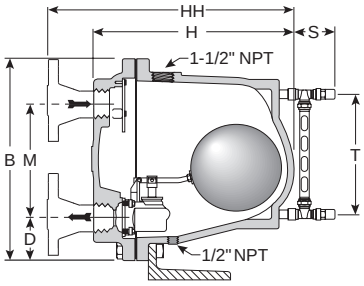

Series MS, LD Shown

Description

The simple yet rugged cast steel construction of the LS & MS Series Ultra-Capacity F&T steam traps offers long, trouble-free service. All floats, valves and seats, and lever mechanisms are constructed of stainless steel.

The integral thermostatic air vent is a balanced-pressure phosphor bronze bellows caged in stainless steel. It is designed especially for heavy-duty industrial applications where highly efficient, uninterrupted service is essential. This balanced-pressure air vent will respond to the pressure-temperature curve of steam at any pressure from zero to 17 bar. Thus – up to 17 bar – air is vented at slightly below steam temperature.

Maximum Operating Conditions

Maximum allowable pressure (vessel design):

Model LS:	31 bar @ 338°C
Model MS:	31 bar @ 338°C

Maximum operating pressure:

Model 30-LS:	2 bar saturated steam
Model 100-LS:	7 bar saturated steam
Model 150-LS:	10 bar saturated steam
Model 250-LS:	17 bar saturated steam
Model 250-MS:	17 bar saturated steam
Model 450-LS:	31 bar saturated steam
Model 450-MS:	31 bar saturated steam

Maximum back pressure: 99% of inlet pressure

Maximum operating temperature bellows: 217°C

Note: For pressures above 17 bar, the thermostatic vent should be removed and only a CC or LD version should be used.

Connections

- Screwed BSPT and NPT
- Socketweld
- Flanged DIN or ANSI (welded)

Materials

Body and cap:	ASTM A216 WCB
Internals:	All stainless steel – 304
Valve(s) and seat(s):	Stainless steel
Drain plug:	Carbon steel
Thermostatic air vent:	Stainless steel and bronze with phosphor bronze bellows, caged in stainless steel

Options

- Integral vacuum breaker 10 bar maximum. Add suffix VB to model number.
- No internal thermostatic air vent for liquid drainer service. Add suffix LD to model number.
- Integral flash release for syphon drainage service. Add suffix CC to model number.
- Armored gauge glass 17 bar @ 218°C
- LS and MS Series available with floor mounting bracket. Consult factory.

Specification

Float and thermostatic steam trap, type ... in cast steel, with thermostatic air vent. Maximum allowable back pressure 99% of inlet pressure.

All dimensions and weights are approximate. Use certified print for exact dimensions. Design and materials are subject to change without notice.

Armstrong International SA • Parc Industriel des Hauts-Sarts (2e Avenue) • 4040 Herstal • Belgium
Tel.: +32 (0)4 240 90 90 • Fax: +32 (0)4 248 13 61
www.armstrong.be • marketing@armstrong.be

LS & MS Series Ultra-Capacity Float & Thermostatic Steam Traps

Cast Steel for Horizontal Installation, with Thermostatic Air Vent

For Pressures to 31 bar...Capacities to 127 000 kg/h

Table ST-131-1. LS Series Capacity

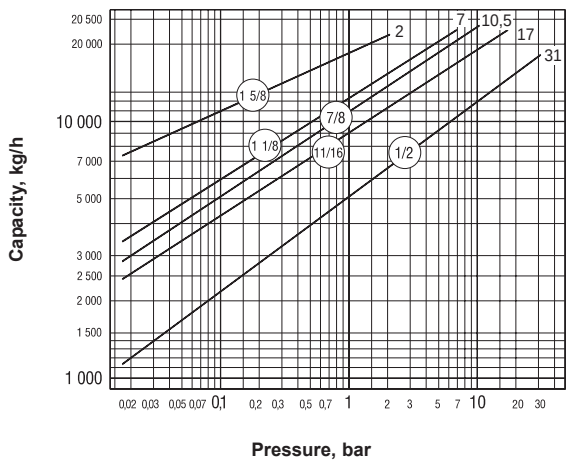

Table ST-131-2. MS Series Capacity

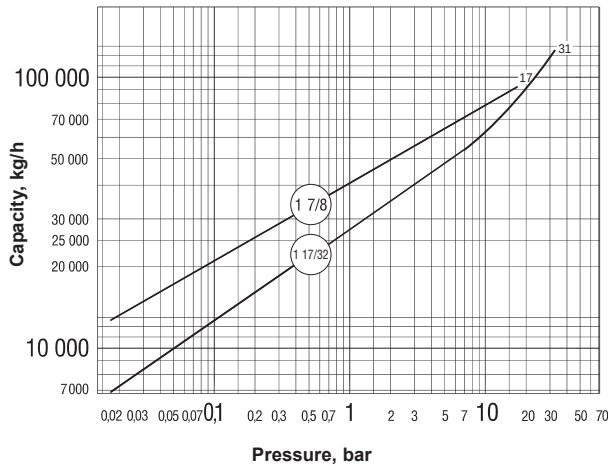

Special Configurations

Condensate controller with flash release for syphon drainage and/or cascade service. The condensate controller (CC) configuration was developed especially to meet very large capacity needs in applications where condensate must be lifted from the drain point to the trap. Under such conditions – often referred to as syphon drainage – the reduction in pressure that occurs when condensate is elevated causes a portion of the condensate to flash into steam. Ordinary traps, unable to differentiate between flash steam and live steam, close and impede drainage.

The LS & MS Series condensate controllers (CC) are equipped with a fixed, restricted orifice near the top of the body to bleed off the flash steam (and all air present). This permits the trap to function properly on condensate.

Liquid drainer with back vent for exceptionally high capacity drainage of liquid from gas under pressure. The liquid drainer (LD) configuration was developed to meet very large capacity needs in draining water and other liquids from air or other gases under pressure. To prevent air or gas binding, the access port in the top of the body serves as a back vent connection to the equipment being drained. For capacity data, see pages LD-361 and LD-384 or consult your Armstrong Representative.

How to Order

Pressure	Model	Connection Size	Option
100	**LS**	**10**	**VB**
30 = 2 bar 100 = 7 bar 150 = 10,5 bar 250 = 17 bar 450 = 31 bar	LS	8 = DN50 10 = DN65	VB = Vacuum Breaker LD = Liquid Drainer CC = Condensate Controller G/G = Gage Glass
250 = 17 bar 450 = 31 bar	MS	12 = DN80	

Installation Notes

Under conditions where the load may approach the maximum capacity of the trap, it is recommended that the size of the discharge line be increased one size as close to the trap cap as is practical.

When LS and MS Series units are used in severe service conditions or at pressures exceeding 2 bar, use an anchoring bracket or other supportive measures to minimize stress on piping.

Ultra-Capacity LS and MS Series units MUST BE WARMED UP in the proper sequence and gradually. Recommended warm-up rate not to exceed 55°C/8 minutes.

See your Armstrong Representative.

Vacuum Breaker – 3/8" and 1/2" NPT

Many times, condensate will be retained ahead of steam traps because of the presence of a vacuum. To break a vacuum, air must be introduced into the system by means of a vacuum breaker.

For maximum protection against freezing and water hammer in heating coils under modulated control, for example, vacuum breakers are recommended in conjunction with freeze protection devices.

Table ST-131-3. Vacuum Breaker (dimensions in mm)

Size	1/2" NPT	3/8" NPT
"B" Pipe Connections	3/8"	1/4"
"H" Height	30	28
"D" Width	22 Hex	17 Hex

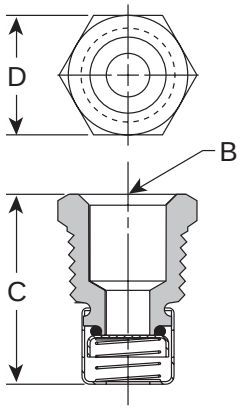

All dimensions and weights are approximate. Use certified print for exact dimensions. Design and materials are subject to change without notice.

F&T-2000 Float & Thermostatic Steam Trap

All Stainless Steel with 360° Connector

For Pressures to 18 bar...Capacities to 600 kg/h

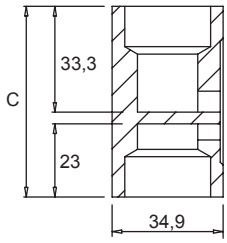

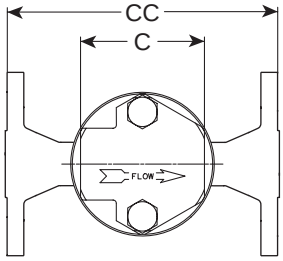

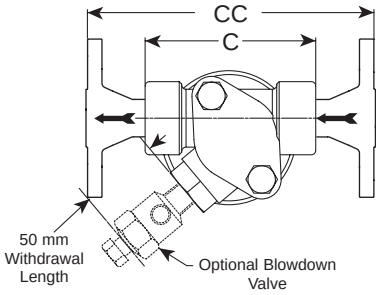

Armstrong's F&T-2000 Float and Thermostatic Steam Trap has a mechanical principal of operation. The float inside the trap follows the condensate level, thus opening and closing the discharge valve. Non-condensable gases accumulate at the top of the trap and are discharged by the wafer thermostatic air vent. This one is located over the main body, thus air volume does not limit condensate level inside of the trap and allows better real-life capacities than for other F&T designs.

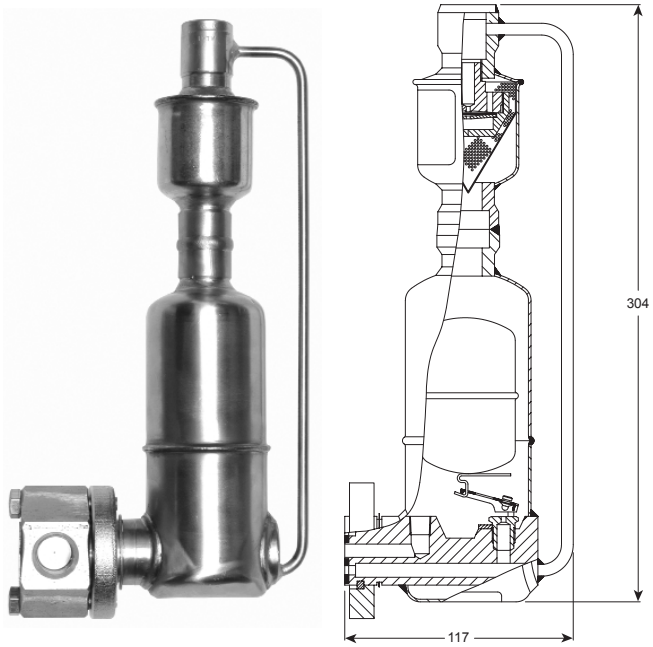

Features

- Compact and lightweight
- Corrosion resistant stainless steel assembly
- Integral strainer on the air vent
- Easy to install and replace
- Universal connector allows flexibility
- Multiple pipe sizes and connections available

Armstrong's F&T-2000 has a sealed, stainless steel body that is lightweight, compact and highly resistant to corrosion. It is piped through the Armstrong 360° Universal Connector or Trap Valve Station (TVS). This makes it easy to install and replace, as the trap can be removed while the connector remains in-line. The result is savings in labor cost and increasing in flexibility, as other trap types (Inverted Bucket, Bimetallic, Thermostatic and Thermodynamic) can be installed on the same connector.

Maximum Operating Conditions

Maximum allowable pressure (vessel design):	25 barg @ 350°C
Maximum operating pressure:	18 barg (orifice #38)

Connections

- Screwed BSPT and NPT
- Socketweld
- Flanged DIN or ANSI (welded)

Table ST-132-1. F&T-2000 Materials

Body	Connector	Trap Valve	Trap Seat	Vent Capsule	Vent Wafer
304L Stainless Steel	304 Stainless Steel	Hardened Chrome Steel – 440F		303 Stainless Steel	Hastelloy

Table ST-132-2. Model F&T 2000 Trap (dimensions in mm)

Model No.	F&T 2000		
	Standard Connector	IS-2 Connector w/Integral Strainer	
Pipe Connections	15 – 20 – 25	15 – 20	25
"C" Face-to-Face (screwed & SW)	60 – 60 – N/A	89	102
"CC" Face-to-Face (flanged PN40*)	150 – 150 – 160	150	160
Blowdown Connection Size	–	1/4" NPT	1/4" NPT
Weight in kg (screwed)	2,3	2,6	2,8
Weight in kg (flanged PN40*)	4,0 – 4,6 – 5,1	4,3 – 4,9	5,6

* Other flange sizes, ratings and face-to-face dimensions are available on request.
All sizes comply with the article 3.3 of the PED (97/23/EC).

All dimensions and weights are approximate. Use certified print for exact dimensions. Design and materials are subject to change without notice.

Armstrong International SA • Parc Industriel des Hauts-Sarts (2e Avenue) • 4040 Herstal • Belgium
Tel.: +32 (0)4 240 90 90 • Fax: +32 (0)4 248 13 61
www.armstrong.be • marketing@armstrong.be

F&T-2000 Float & Thermostatic Steam Trap

All Stainless Steel with 360° Connector

For Pressures to 18 bar...Capacities to 600 kg/h

Table ST-133-1. Model F&T-2000 Capacity

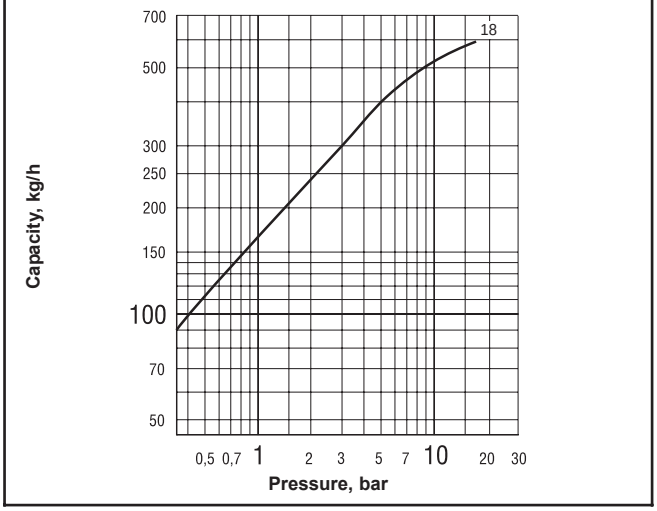

Options

Blowdown valve – IS-2 connector only
Plug for IS-2 strainer blowdown connection

How to Order

Specify:

- Size and type of pipe connection
- Type of 360° connector (with or without strainer)
- Any options required

Specification

Float and thermostatic steam trap, type F&T-2000 in stainless steel, with thermostatic air vent. Piped through 360° Universal Connector or Trap Valve Station (TVS). Maximum allowable back pressure 99% of inlet pressure.

All dimensions and weights are approximate. Use certified print for exact dimensions. Design and materials are subject to change without notice.

CD-33/CD-33S Controlled Disc Steam Traps

Adapts to outdoors
Optional rain guard insulating cap available to prevent excessive radiant heat loss in outside applications.

Extended life
Three discharge port design offers stable disc operation to extend trap operating life.

Durable
Hardened stainless steel integral seat and disc for long operating life.

Connections
Available in 1/2", 3/4", 1" screwed, flanged or socket weld connections.

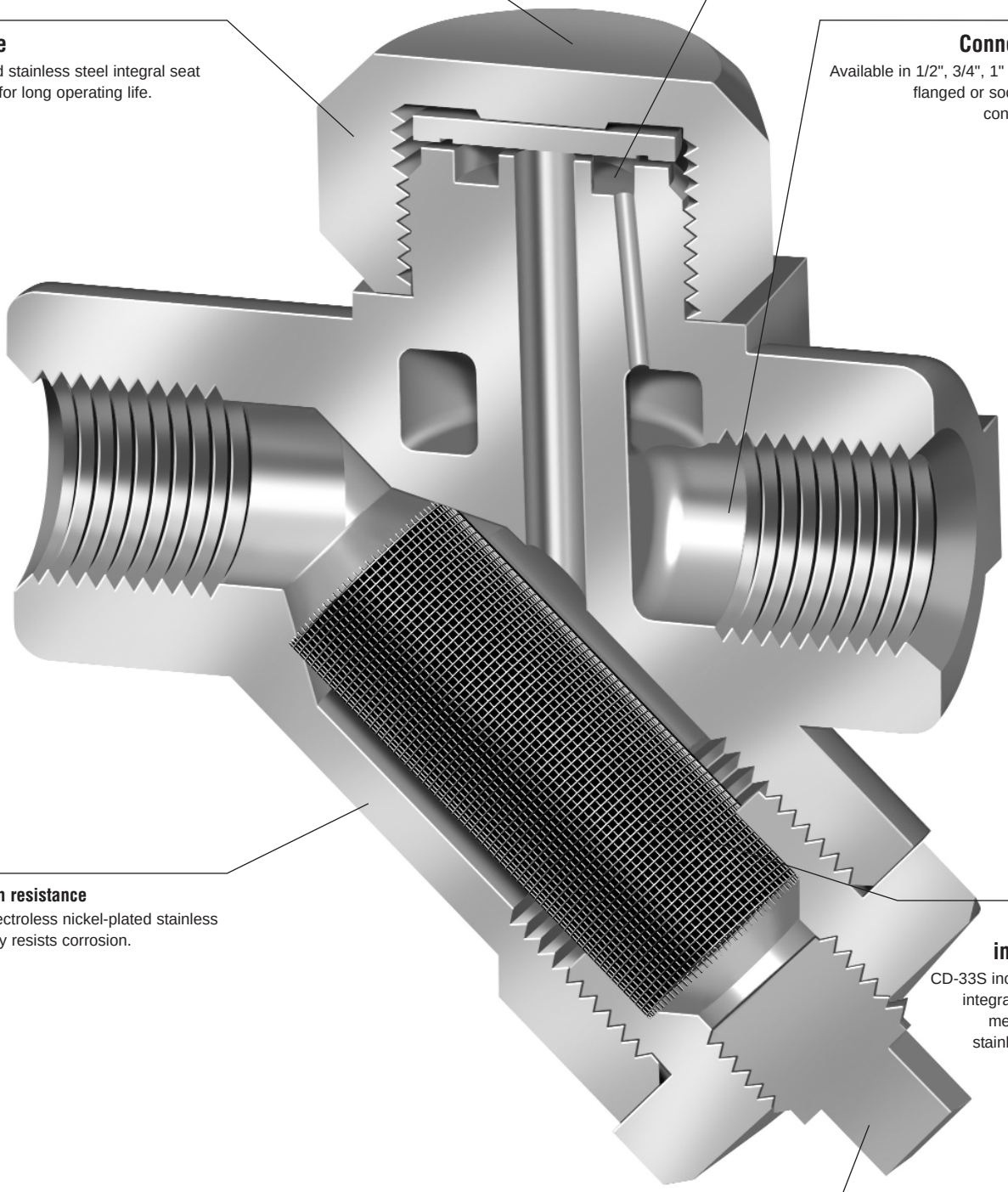

Corrosion resistance
Tough electroless nickel-plated stainless steel body resists corrosion.

Screen included
CD-33S includes an integral 30 x 30 mesh T-304 stainless steel screen.

Blowdown choice
Blowdown plug standard. Blowdown valve available as an option.

Armstrong International SA • Parc Industriel des Hauts-Sarts (2e Avenue) • 4040 Herstal • Belgium
Tel.: +32 (0)4 240 90 90 • Fax: +32 (0)4 248 13 61
www.armstrong.be • marketing@armstrong.be

CD-33/CD-33S Controlled Disc Steam Traps

The Armstrong CD-33 is a controlled disc style trap designed to control the trap's cycle rate. By reducing the cycle rate, the Armstrong CD-33 will have a longer service life than typical disc traps. This enhanced performance will ensure that maintenance time is minimized and steam costs are greatly reduced.

The CD-33 is designed with three discharge ports, which offer stable disc operation to extend trap operating life. The capacities of the Armstrong CD-33 have been engineered specifically for the following applications: large steam main drips, process equipment, and HVAC heating equipment on constant pressure. The CD-33L (low capacity) trap is designed for the low capacity applications of steam main drips and steam tracing lines. By ensuring that the capacities are designed to suit the application, and are not oversized, the CD-33 Series will last longer than other disc traps with excessive capacity ratings.

Advantages

- Three discharge port design
- Minimum wear with controlled cycling
- Freeze-resistant
- Hardened seat and disc

Specification

Steam trap shall be stainless steel controlled disc type, integral seat design with hardened disc and seating surfaces, and electroless nickel plated finish. When required, trap shall be supplied with an integral Y strainer, integral blowdown valve or rain guard insulating cap. Maximum allowable pressure (vessel design) shall be 63 bar @ 400°C. Maximum operating pressure shall be 42 bar @ 400°C.

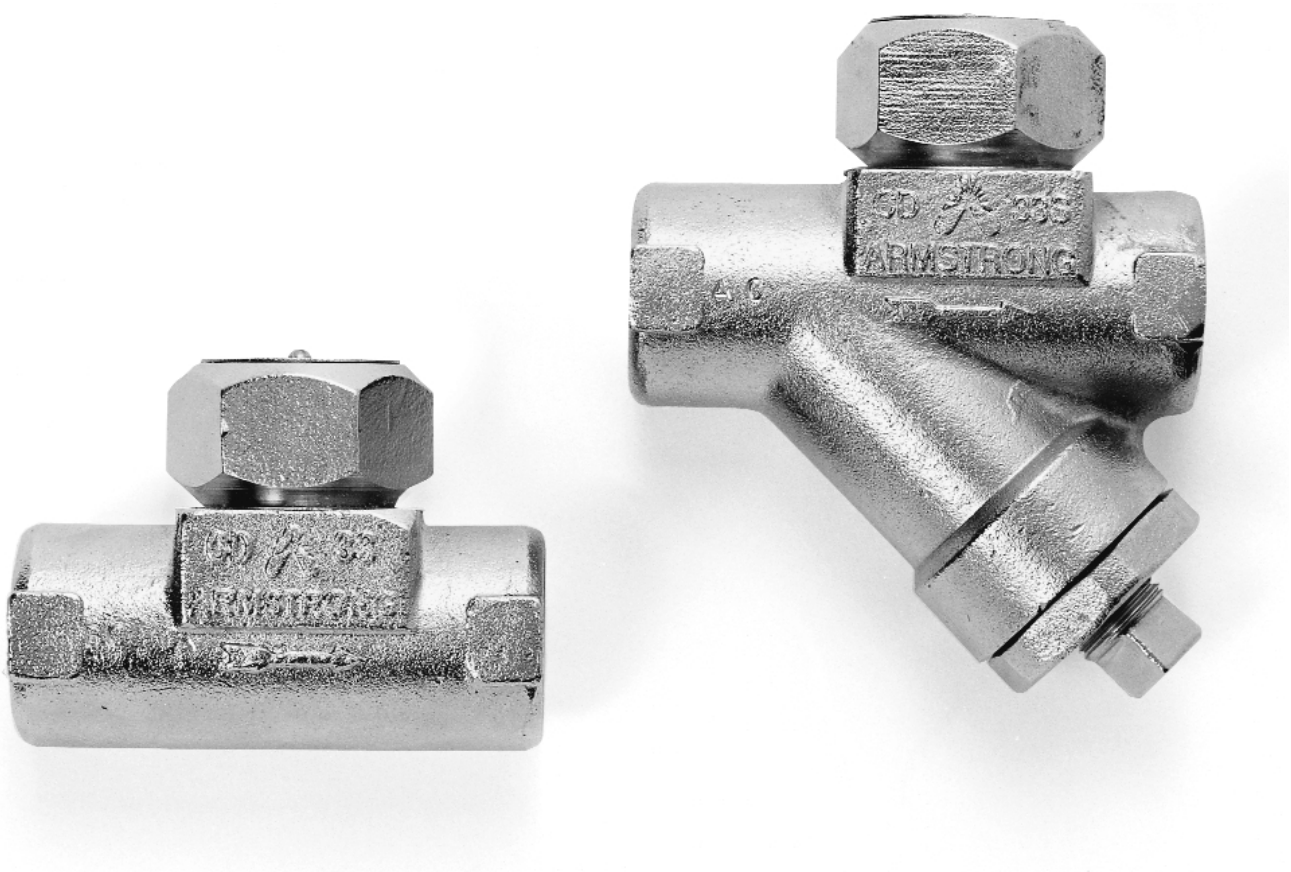

CD-33 Series Controlled Disc Steam Traps

All Stainless Steel

For Pressures to 41 bar...Capacities to 1 130 kg/h

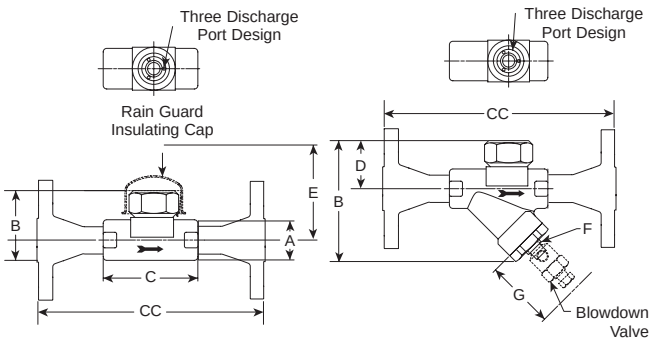

CD-33/CD-33L Series **CD-33S/CD-33SL Series** with Integral Strainer

The Armstrong CD-33 is a controlled disc style trap designed to control the trap's cycle rate. By reducing the cycle rate, the Armstrong CD-33 will have a longer service life than typical disc traps. This enhanced performance will ensure that maintenance time is minimized and steam costs are greatly reduced.

The CD-33 is designed with three discharge ports, which offer stable disc operation to extend trap operating life. The capacities of the Armstrong CD-33 have been engineered specifically for the following applications: large steam main drips, process equipment, and HVAC heating equipment on constant pressure. The CD-33L (low capacity 1/2" and 3/4" only) trap is designed for the low capacity applications of steam main drips and steam tracing lines. By ensuring that the capacities are designed to suit the application, and are not oversized, the CD-33 Series will last longer than other disc traps with excessive capacity ratings.

Connections

Screwed BSPT and NPT
Flanged DIN or ANSI (welded)

Specification

Steam trap shall be stainless steel controlled disc type, integral seat design with hardened disc and seating surfaces, and electroless nickel plated finish. When required, trap shall be supplied with an integral Y strainer, integral blowdown valve or rain guard insulating cap. Maximum allowable pressure (vessel design) shall be 63 bar @ 400°C. Maximum operating pressure shall be 41 bar @ 400°C.

Table ST-136-1. List of Materials

Name of Part	Material
Body	ASTM A743 Gr. CA40
Cap	ASTM A743 Gr. CA40
Disc	ASTM A276 Gr. 420
Strainer Screen	30 x 30 Mesh T-304 Stainless Steel
Screen Retainer	ASTM A743 Gr. CA40
Blowdown Plug (CD-33S only)	Carbon Steel
Options	
Blowdown Valve	Stainless Steel
Rain Guard Insulating Cap (1/2", 3/4" Sizes Only)	Stainless Steel

Table ST-136-2. CD-33 Series Capacity

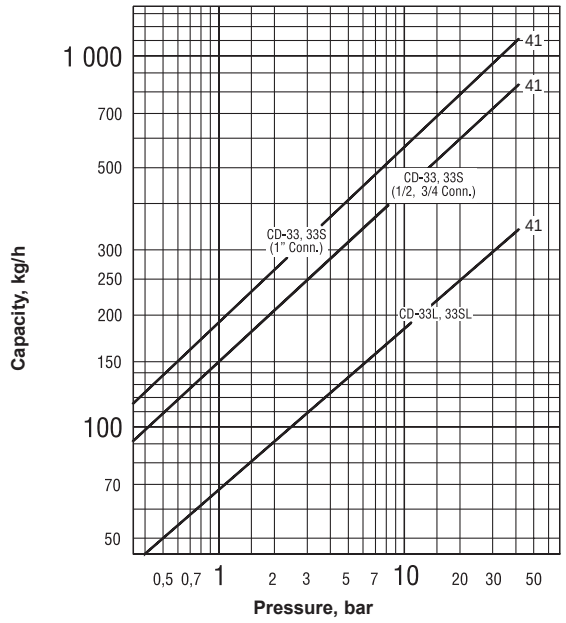

Note: CD traps can operate with minimum of 0,15 bar inlet pressure and a maximum of 80% back pressure. However, for best results, inlet pressure should not drop below 0,70 bar and back pressure should not exceed 50% of inlet pressure.

Table ST-136-3. CD-33 Series Trap (dimensions in mm)

Model No.	CD-33		CD-33S (with strainer)		CD-33L (low capacity)	CD-33SL (with strainer) (low capacity)
Pipe Connections	15 – 20	25	15 – 20	25	15 – 20	15 – 20
"A" Body Diameter	37	44	37	44	37	37
"B" Height	63	79	108	121	63	108
"C" Face-to-Face (screwed)	84	100	90	105	84	90
"CC" Face-to-Face (flanged PN40*)	150	160	150	160	150	150
"D" ℄ to Top of Cap	44	57	44	57	44	44
"E" Withdrawal Distance Rain Guard Insulating Cap	–	–	76	76	–	76
"F" Blowdown Connection Size	–	–	1/4" NPT	1/4" NPT	–	1/4" NPT
"G" Withdrawal Distance Blowdown Valve	–	–	89	89	–	89
Weight in kg (screwed)	0,64	1,1	1,0	1,5	0,64	1,0
Weight in kg (flanged PN40*)	2,1 – 2,7	3,7	2,5 – 3,1	4,1	2,1 – 2,7	2,5 – 3,1
Maximum Allowable Pressure	63 bar @ 400°C					
Minimum Operating Pressure	0,24 bar					
Maximum Operating Pressure	41 bar @ 252°C					

* Other flange sizes, ratings and face-to-face dimensions are available on request.
All models comply with the article 3.3 of the PED (97/23/EC).

All dimensions and weights are approximate. Use certified print for exact dimensions. Design and materials are subject to change without notice.

Armstrong International SA • Parc Industriel des Hauts-Sarts (2e Avenue) • 4040 Herstal • Belgium
Tel.: +32 (0)4 240 90 90 • Fax: +32 (0)4 248 13 61
www.armstrong.be • marketing@armstrong.be

CD-3300 Controlled Disc Steam Trap

All Stainless with 360° Connector

For Pressures to 31 bar…Capacities to 360 kg/h

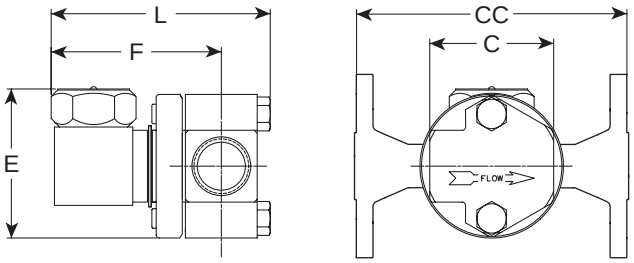

CD-3300 with Standard Connector

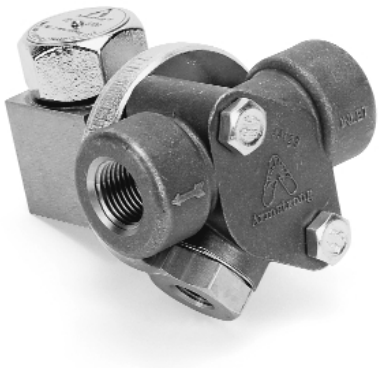

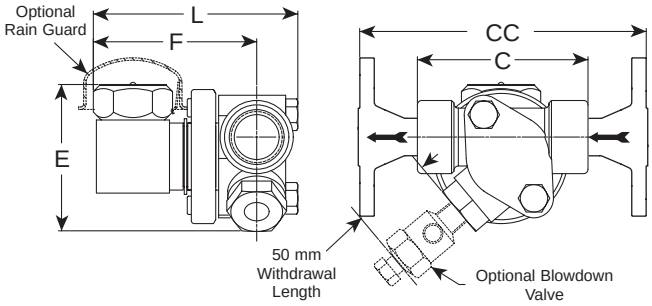

CD-3300 with IS-2 Connector with Integral Strainer

The Armstrong CD-3300 is a three discharge port design, which provides stable disc operation to extend operating life.

The CD-3300 is piped in-line by a 360° universal connector which allows you to install the trap in virtually any piping configuration. Armstrong's unique standard connector or its IS-2 connector with integral strainer makes the CD-3300 easy to install, easy to renew. You save on labor time and cost because the connector simplifies piping and remains in-line.

Materials

Trap and cap:	ASTM A743 CA40
Trap disc:	ASTM A276 Gr.420
Trap body:	ASTM A276 Gr.420
Standard connector:	Stainless steel – 304
IS-2 connector with integral strainer:	ASTM A351 Gr.CF8 20 x 20 mesh 304 SS Screen

Connections

Screwed BSPT and NPT
Socketweld
Flanged DIN or ANSI (welded)

Table ST-137-1. Model CD-3300 Capacity

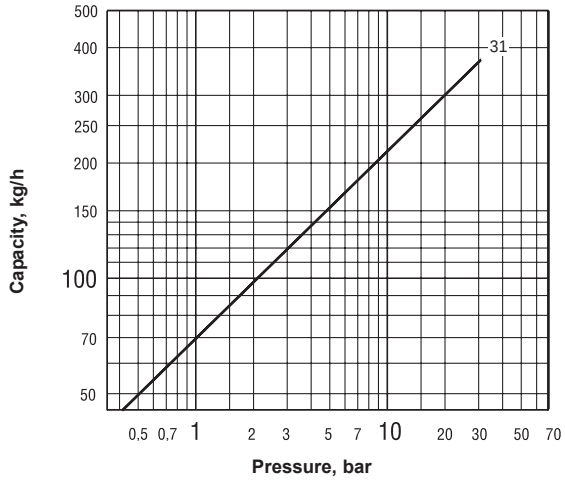

Note: CD traps can operate with minimum of 0,15 bar inlet pressure and a maximum of 80% back pressure. However, for best results, inlet pressure should not drop below 0,70 bar and back pressure should not exceed 50% of inlet pressure.

Options

Rain guard insulating cap
Blowdown valve – IS-2 connector only
Plug for IS-2 strainer blowdown connection

Table ST-137-2. Model CD-3300 Trap (dimensions in mm)

Model No.	CD-3300		
	Standard Connector	IS-2 Connector w/Integral Strainer	
Pipe Connections	15 – 20 – 25	15 – 20	25
"C" Face-to-Face (screwed & SW)	60 – 60 – N/A	89	102
"CC" Face-to-Face (flanged PN40*)	150 – 150 – 160	150	160
"L" Overall Length	106	106	106
"H" Overall Height	76	76	89
"F" ℄ to Body End	86	86	86
Blowdown Connection Size	–	1/4" NPT	1/4" NPT
Weight in kg (screwed)	1,6	1,8	2,0
Weight in kg (flanged PN40*)	3,3 – 3,9 – 4,4	3,5 – 4,1	4,8
Maximum Allowable Pressure	50 bar @ 400°C		
Maximum Operating Pressure	31 bar @ 236°C		

* Standard flanges are in carbon steel, stainless steel flanges are optional. Other flange sizes, ratings and face-to-face dimensions are available on request. All sizes comply with the article 3.3 of the PED (97/23/EC).

All dimensions and weights are approximate. Use certified print for exact dimensions. Design and materials are subject to change without notice.

CD-40 and CD-60 Series Controlled Disc Steam Traps

Carbon Steel

For Pressures to 41 bar...Capacities to 1 300 kg/h

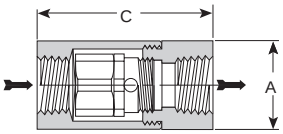

CD-40 Series Trap

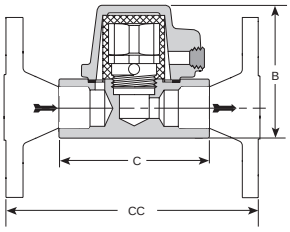

CD-60 Series Trap

(CD-63 Model shown)





Description

Armstrong CD-40 and CD-60 Series controlled disc traps contain a replaceable capsule, making it possible to renew a worn trap by simply replacing the capsule. A heating chamber in the shell ensures consistent operation. This steam jacket provides a relatively constant temperature in the control chamber regardless of ambient conditions. Cycling rate is controlled and does not increase when the trap is exposed to cold winds, rain or snow. CD-40 Series traps are also available with optional integral 0,045" perforated stainless steel strainer screens. CD-60 Series traps contain integral strainers with ratios of open area to inside area of pipe that equal or exceed those of most separate "Y" type strainers.

Maximum Operating Conditions

Maximum allowable pressure (vessel design):

Model CD-40	41 bar @ 260°C
Model CD-60	41 bar @ 399°C

Maximum operating pressure:	41 bar at saturated steam temp.
Minimum operating pressure:	0,7 bar
Maximum back pressure:	50% of inlet pressure (recommended)

Connections

Model CD-40 and CD-60	Screwed BSPT and NPT
Model CD-60	Socketweld
Model CD-60	Flanged DIN or ANSI (welded)

Materials Model CD-40

Body:	Carbon steel – C-1215
Control chamber:	Hardened stainless steel
Disc:	Hardened stainless steel
Capsule body:	Hardened stainless steel
Strainer screen (option):	Stainless steel

Materials Model CD-60

Body:	ASTM A216 WCB
Cap:	ASTM A216 WCB or ASTM A105
Control chamber:	Hardened stainless steel
Disc:	Hardened stainless steel
Capsule body:	Hardened stainless steel
Strainer screen:	20 x 20 mesh stainless steel

Option

CD-40 Series integral strainer screen (0,045" perforated stainless steel)

Table ST-138-1. CD-40 & CD-60 Series Capacity

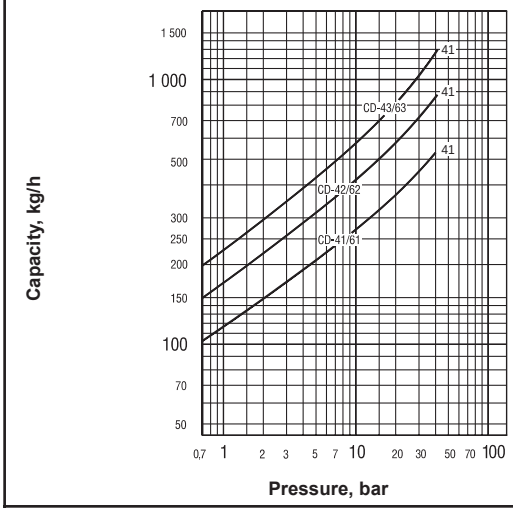

Capacities given are continuous discharge capacities in kilograms of hot condensate per hour at pressure differential indicated with condensate temperatures approximately 14°C below steam temperatures.

Note: CD traps can operate with minimum of 0,15 bar inlet pressure and a maximum of 80% back pressure. However, for best results, inlet pressure should not drop below 0,70 bar and back pressure should not exceed 50% of inlet pressure.

Specification

Controlled disc steam trap, type ... in carbon steel. CD-60 includes integral strainer. Maximum allowable pressure 41 bar.

How to Order

Specify:

- Model number
- Size and type of pipe connection
- Any options required

Table ST-138-1. CD-40 and CD-60 Series Trap (dimensions in mm)

Model No.	CD-41*		CD-42*	CD-43*	CD-61		CD-62	CD-63
Pipe Connections	3/8"	1/2"	3/4"	1"	10	15	20	25
"A" Body Outside Diameter	31,7	31,7	41,3	60,3	–	–	–	–
"B" Height	–	–	–	–	66,7	66,7	87,3	108,0
"B" Face-to-Face (screwed & SW)	76,2	86,5	100,0	117,5	88,9	88,9	117,0	122,0
"C" Face-to-Face (flanged PN40**)	–	–	–	–	–	150	170	180
Weight in kg (screwed & SW)	0,3		0,8	1,9	1,2	1,1	2,2	3,1
Weight in kg (flanged PN40**)	–		–	–	–	2,6	4,3	5,7

* Optional integral strainer available.

** Other flange sizes, ratings and face-to-face dimensions are available on request.

All models comply with the article 3.3 of the PED (97/23/EC).

All dimensions and weights are approximate. Use certified print for exact dimensions. Design and materials are subject to change without notice.

Armstrong International SA • Parc Industriel des Hauts-Sarts (2e Avenue) • 4040 Herstal • Belgium
Tel.: +32 (0)4 240 90 90 • Fax: +32 (0)4 248 13 61
www.armstrong.be • marketing@armstrong.be

CD-61-AB Controlled Disc Steam Trap

Carbon Steel

For Pressures to 24 bar…Capacities to 520 kg/h

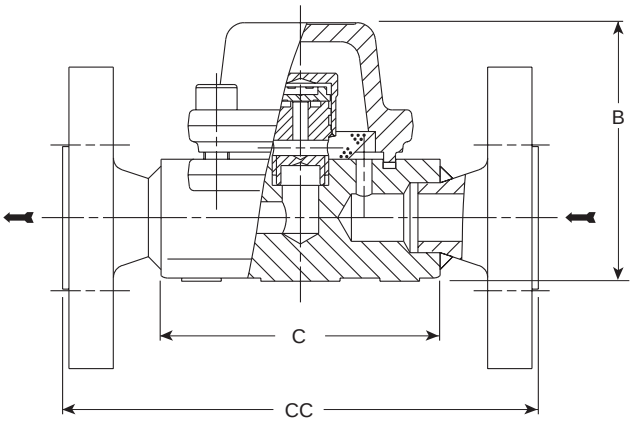



Description

Armstrong CD-61-AB controlled disc trap contains a replaceable capsule which makes it possible to renew a worn trap by simply replacing the capsule. Consistent operation is assured by a heating chamber in the shell. This steam jacket provides a relatively constant temperature in the control chamber regardless of ambient conditions. Cycling rate is controlled and does not increase when the trap is exposed to cold winds, rain or snow.

Maximum operating conditions

Maximum allowable pressure (vessel design):	24 bar @ 350°C
Maximum operating pressure:	24 bar
Minimum operating pressure:	0,7 bar
Maximum back pressure:	50% of inlet pressure (recommended)

Connections

Screwed BSPT and NPT
Socketweld
Flanged DIN or ANSI (welded)

Materials

Cap and body:	Carbon steel
Capsule:	All stainless steel – 420F
Gasket:	Graphite

Specification

Capsulated controlled disc steam trap, type CD-61-AB in carbon steel, with integral strainer.

How to order

Specify:

- Size and type of pipe connection
- Maximum working pressure that will be encountered
- Maximum condensate load

Trap selection

Series CD traps operate most efficiently when the condensate load ranges between 5% and 50% of trap capacity. Therefore select a trap with a capacity twice the calculated maximum load.

Table ST-139-1. Model CD-61-AB Trap (dimensions in mm)

Connection size	15	20	25
"B" Height	77,5	77,5	77,5
"C" Face-to-Face (screwed & SW)	90	90	–
"CC" Face-to-Face (flanged PN40*)	150	150	160
Weight in kg (screwed & SW)	1,7	1,7	–
Weight in kg (flanged PN40*)	4,1	4,3	4,5

* Other flange sizes, ratings and face-to-face dimensions are available on request.

All sizes comply with the article 3.3 of the PED (97/23/EC).

Table ST-139-1. Model CD-61-AB Capacity

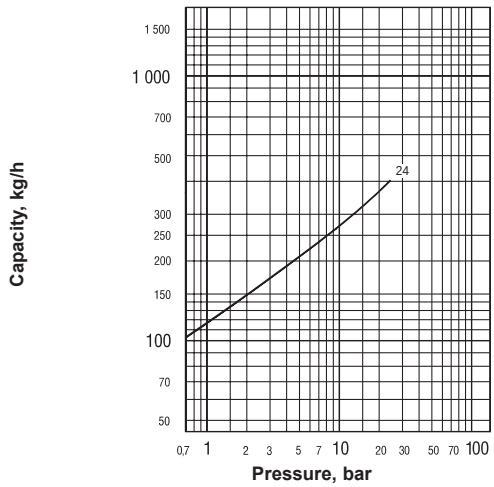

Capacities given are continuous capacities in kilograms of hot condensate per hour at pressure differential indicated with hot condensate temperatures approximately 14°C below steam temperatures.

Note: CD traps operate with minimum of 0,15 bar inlet pressure and a maximum of 80% back pressure. However, for best results, inlet pressure should not drop below 0,7 bar and back pressure should not exceed 50% of inlet pressure.

All dimensions and weights are approximate. Use certified print for exact dimensions. Design and materials are subject to change without notice.

AB Bimetallic Steam Trap

Carbon Steel

For Pressures to 22 bar...Capacities to 2 100 kg/h

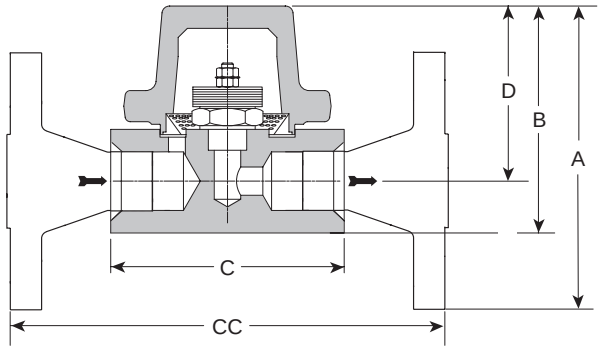



Description

The AB steam trap operates on the temperature principle using two layers of bimetallic elements that have different expansion coefficients. The stem connected to these elements moves a valve into either an open or closed position.

During start-up, the trap is cold so the elements are flat and the valve is wide open. This results in air and condensate being easily removed from the system.

In standard operation, the position of the valve depends on two parameters: first, the pressure, which will cause the valve to open; and second, the temperature, which will cause the elements to convex and the valve to close.

When no condensate is present and set temperature is reached, the force of the elements is then high enough to completely close the valve.

The AB steam trap can adjust itself to changing conditions, because if the pressure rises, the higher pressure works on the valve. At the same time, the higher temperature will work on the elements.

Maximum Operating Conditions

Maximum allowable pressure (vessel design):	40 bar @ 400°C
Maximum operating pressure:	22 bar
Maximum back pressure:	99% of inlet pressure

Connections

Screwed BSPT and NPT
Socketweld
Flanged DIN or ANSI (welded)

Materials

Body and cap:	Carbon steel
Valve:	Chrome Steel - 440F
Seat:	Stainless steel - 303, Boronized
Bimetallic elements:	Nickel plated

Table ST-140-1. Model AB Trap (dimensions in mm)

Model No.	AB
Pipe Connections	15 – 20 – 25
"B" Height (screwed & SW)	77,5
"A" Height (flanged PN40*)	107 – 112 – 119
"C" Face-to-Face (screwed & SW)	88 – 88 – N/A
"CC" Face-to-Face (flanged PN40*)	150 – 150 – 160
"D" ℄ to Top	60
Weight in kg (screwed & SW)	1,7
Weight in kg (flanged PN40*)	4,1 – 4,3 – 4,5

* Other flange sizes, ratings and face-to-face dimensions are available on request.
All sizes comply with the article 3.3 of the PED (97/23/EC).

Valve Boronized

The problem of wiredrawing of valve and seat materials is well known to users of steam traps and other types of valves. Wiredrawing is a particular problem to valves and seats of bimetallic traps, which rely on bimetallic elements to operate.

To solve the problem of wiredrawing, a new thermochemical surface treatment has been developed. The basic valve material is machinable hardened chrome steel. Atoms of highly resistant material are thermochemically diffused into the valve, giving a layer of protection and a hardness of 1700 HV to the basic material. Because of this new thermochemical treatment, the surface of the valve is highly resistant to the erosive action of flashing condensate. The failure rate of Armstrong bimetallic traps due to wearing out of valve and seat material is greatly reduced.

Specification

Bimetallic steam trap with valve boronized, type AB in carbon steel. Maximum allowable back pressure 99% of inlet pressure.

How to Order

Specify:

- Model number
- Size and type of pipe connection.

Table ST-140-2. Model AB Capacity

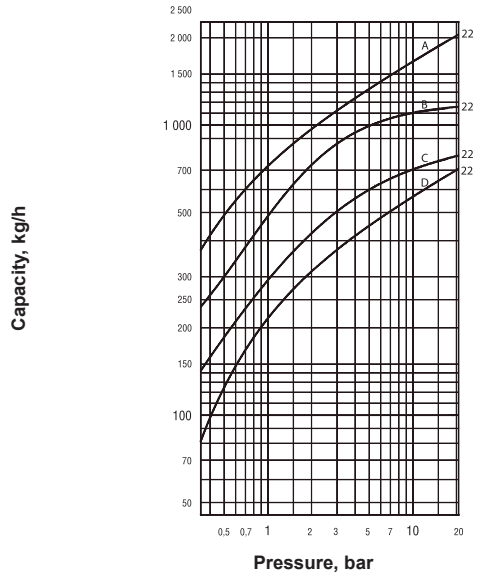

A = Cold Water
B = 40°C Below Saturation
C = 20°C Below Saturation
D = 10°C Below Saturation

All dimensions and weights are approximate. Use certified print for exact dimensions. Design and materials are subject to change without notice.

Armstrong International SA • Parc Industriel des Hauts-Sarts (2e Avenue) • 4040 Herstal • Belgium
Tel.: +32 (0)4 240 90 90 • Fax: +32 (0)4 248 13 61
www.armstrong.be • marketing@armstrong.be

AB-2000 Bimetallic Steam Trap

Stainless Steel

For Pressures to 22 bar…Capacities to 2 100 kg/h

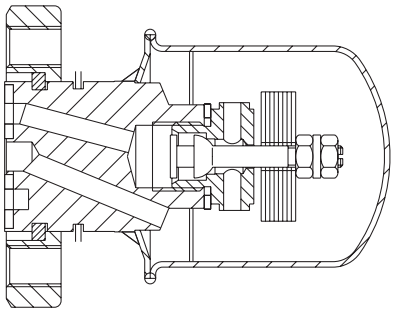



Description

Armstrong's AB-2000 Bimetallic Steam Trap operates by the effect that rising temperature has on bimetallic elements. It adjusts itself to changing conditions, as the increasing pressure on the valve is compensated by the curving of the bimetallic elements caused by the increasing temperature. The valve of the AB-2000 is specially treated (boronization) in order to be more resistant to wiredrawing due to erosive condensate flashing.

Armstrong's AB-2000 has a sealed, stainless steel body that is lightweight, compact and highly resistant to corrosion. It is piped through the Armstrong 360° Universal Connector or Trap Valve Station (TVS). This makes it easy to install and replace, as the trap can be removed while the connector remains in-line. The result is savings in labor cost and increasing in flexibility, as other trap types (Inverted Bucket, Thermostatic and Thermodynamic) can be installed on the same connector.

Valve Boronized

The problem of wiredrawing of valve and seat materials is well known to users of steam traps and other types of valves. Wiredrawing is a particular problem to valves and seats of bimetallic traps, which rely on bimetallic elements to operate.

To solve the problem of wiredrawing, a new thermochemical surface treatment has been developed. The basic valve material is machinable hardened chrome steel. Atoms of highly resistant material are thermochemically diffused into the valve, giving a layer of protection and a hardness of 1700 HV to the basic material. Because of this new thermochemical treatment, the surface of the valve is highly resistant to the erosive action of flashing condensate. The failure rate of Armstrong bimetallic traps due to wearing out of valve and seat material is greatly reduced.

Table ST-141-1. Model AB-2000 Trap (dimensions in mm)

Pipe Connections	15 – 20 – 25
"C" Face-to-Face (screwed & SW)	60 – 60 – N/A
"CC" Face-to-Face (flanged PN40*)	150 – 150 – 160
Weight in kg (screwed & SW)	1,7
Weight in kg (flanged PN40*)	4,1 – 4,3 – 4,5

* Standard flanges are in carbon steel, stainless steel flanges are optional. Other flange sizes, ratings and face-to-face dimensions are available on request.

All sizes comply with the article 3.3 of the PED (97/23/EC).

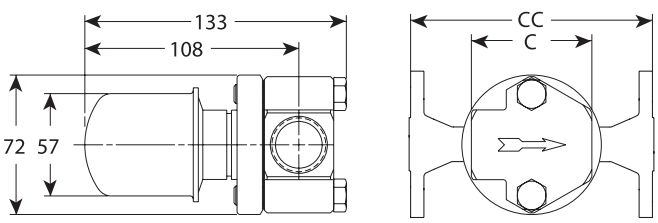

Maximum operating conditions

Maximum allowable pressure (vessel design):	28 bar @ 343°C
Maximum operating pressure:	22 bar
Maximum back pressure:	99% of inlet pressure

Connections

Screwed BSPT and NPT
Socketweld
Flanged DIN or ANSI (welded)

Materials

Body:	304L Stainless steel
Standard connector:	Stainless steel – 304
Valve:	Chrome steel – 440F, Boronized
Seat:	303 Stainless steel
Elements:	Nickel plated
Strainer:	304 Stainless steel

Specification

Bimetallic steam trap with valve boronized, type AB-2000 in stainless steel, with integral strainer. Piped through 360° Universal Connector or Trap Valve Station (TVS). Maximum allowable back pressure 99% of inlet pressure.

How to order

Specify:

- Size and type of pipe connection.
- Maximum working pressure that will be encountered
- Maximum condensate load

Table ST-141-2. Model AB-2000 Capacity

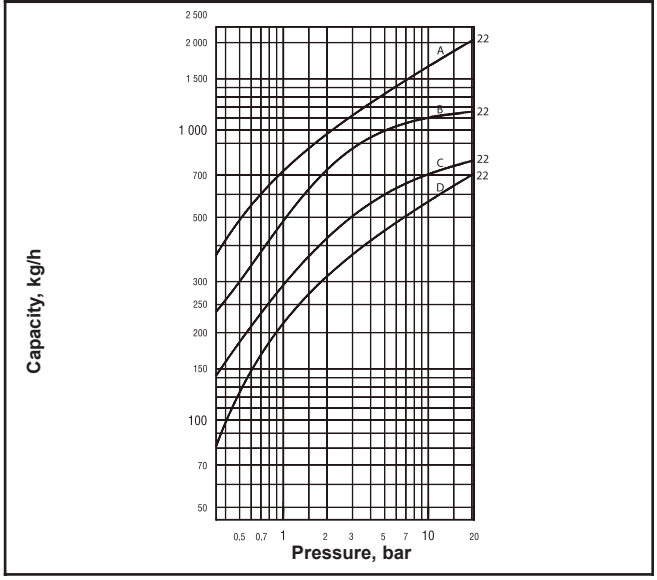

A = Cold Water
B = 40°C Below Saturation
C = 20°C Below Saturation
D = 10°C Below Saturation

All dimensions and weights are approximate. Use certified print for exact dimensions. Design and materials are subject to change without notice.

AB-600 Bimetallic Steam Trap

Carbon Steel

For Pressures to 41 bar…Capacities to 4 000 kg/h

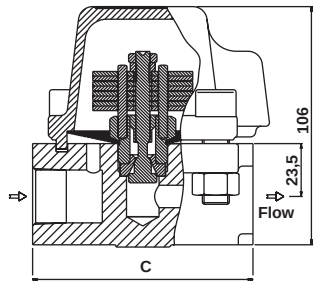

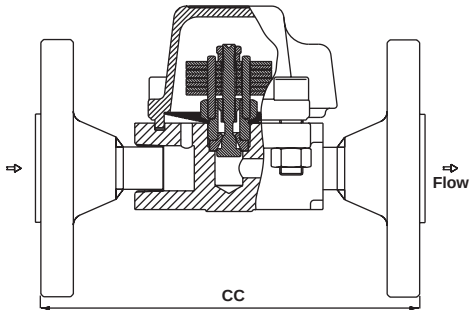

Description

Armstrong's AB-600 Bimetallic Steam Trap operates by the effect that rising temperature has on bimetallic elements. It adjusts itself to changing conditions, as the increasing pressure on the valve is compensated by the curving of the bimetallic elements caused by the increasing temperature.

Armstrong's AB-600 Bimetallic Steam Trap is the ideal solution for applications where other trap styles are not resisting to tough operating conditions. It also has the ability to handle the large start up loads associated with superheat applications. The unique bimetallic element allows for tight shut off before superheat reaches the trap thus preventing steam loss. The AB-600 utilizes a titanium valve and seat to ensure extremely long service life in the harsh environment of superheated steam systems.



Maximum operating conditions

Maximum allowable pressure (vessel design):	41 bar @ 400°C
Maximum operating pressure:	41 bar
Maximum back pressure:	99% of inlet pressure

Connections

Screwed BSPT and NPT
Socketweld
Flanged DIN or ANSI (welded)

Specification

Bimetallic steam trap with valve boronized, type AB-600 in carbon steel, with integral strainer. Suitable also for superheated steam applications. Maximum allowable back pressure 99% of inlet pressure.

How to order

Specify:

- Size and type of pipe connection.
- Maximum working pressure that will be encountered
- Maximum condensate load

Table ST-142-1. Model AB-600

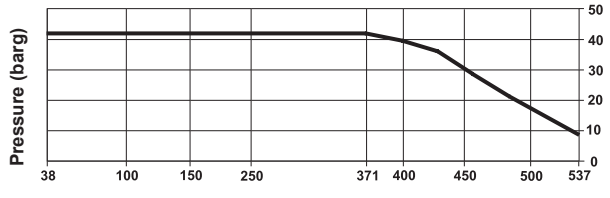

Table ST-142-2. Model AB-600 Trap (dimensions in mm)

Pipe Connections	15 – 20	25
"C" Face-to-Face (screwed & SW)	98	–
"CC" Face-to-Face (flanged PN40*)	150	160
Weight in kg (screwed & SW)	2,8	–
Weight in kg (flanged PN40*)	4,3 – 4,5	4,7

* Other flange sizes, ratings and face-to-face dimensions are available on request.
All sizes comply with the article 3.3 of the PED (97/23/EC).

Materials

Body:	Carbon steel C22.8 (corrosion resistant stainless steel body is optional)
Cap:	Carbon steel ASTM A105
Valve:	Titanium
Seat:	Titanium
Elements:	Ni-Cr and Stainless steel
Strainer:	304 Stainless steel

Table ST-142-3. Model AB-600 Cold Water Capacity

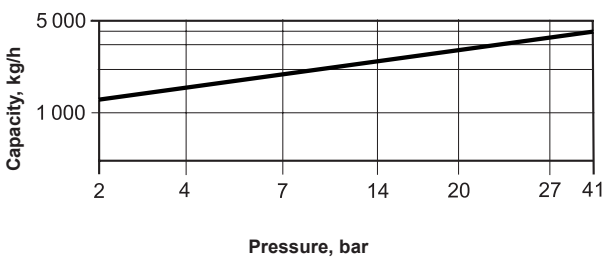

All dimensions and weights are approximate. Use certified print for exact dimensions. Design and materials are subject to change without notice.

Armstrong International SA • Parc Industriel des Hauts-Sarts (2e Avenue) • 4040 Herstal • Belgium
Tel.: +32 (0)4 240 90 90 • Fax: +32 (0)4 248 13 61
www.armstrong.be • marketing@armstrong.be

SH-900 Series Bimetallic Superheat Steam Trap

Stainless Steel

For Pressures to 62 bar...Capacities to 4 990 kg/h

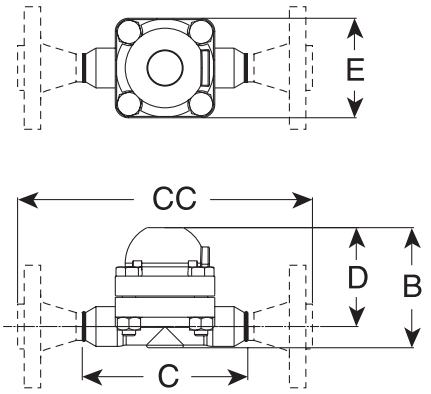

Model SH-900



Description

SH Series superheat steam traps operate by the effect that rising temperature has on the thermostatic bimetallic elements.

At start-up the valve is wide open, which allows a large volume of non-condensables and cold condensate to be removed from the system. When the system reaches steam temperature, the elements become sufficiently hot to pull on the trap's valve stem, closing the valve.

The valve remains closed until the bimetallic elements cool, thus allowing the valve to crack open, vent the condensate and non-condensables, and then close again when steam temperature is reached.

The SH Series superheat steam traps adjust automatically to changing conditions. Hot elements in the valve generate forces to offset rises in pressure.

Specification

Bimetallic style steam traps type SH-900 in stainless steel with integral stainless steel strainer, inline repairable. The mechanism shall consist of a stacked nickel-chrome bimetal operator with titanium valve and seat. The steam trap shall be capable of operation on low-load applications throughout its pressure/temperature range. Maximum allowable back pressure 99% of inlet pressure.

How to Order

Specify:

- **SH-900 is available in two versions: low pressure from 17 - 44 barg (SH-900L) and high pressure from 41 - 62 barg (SH-900H)**
- Size and type of pipe connection
- Maximum working pressure that will be encountered
- Maximum condensate load

Table ST-143-1. Model SH-900 Cold Water Capacity

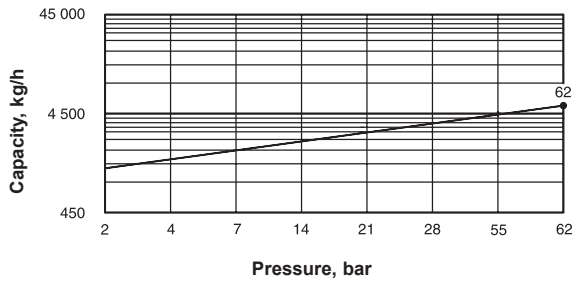

Table ST-143-2. Model SH-900 Pressure/Temperature Rating

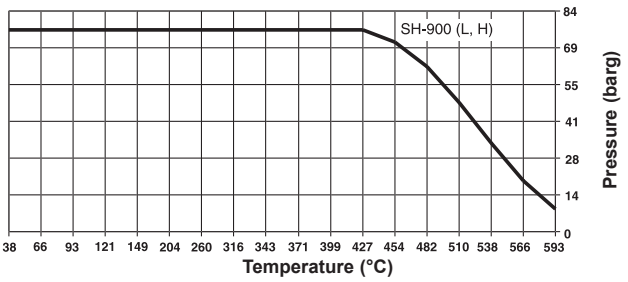

Maximum operating conditions

Maximum allowable pressure (vessel design):	62 bar @ 482°C
Maximum operating pressure:	62 bar
Maximum back pressure:	99% of inlet pressure

Table ST-143-3. SH Series

Model	SH-900*
Pipe Connections	mm
	15 – 20 – 25
"B" Height	115
"C" Face-to-Face (screwed & SW)	158
"CC" Face-to-Face (flanged PN64*)	N/A
"D" ℄ to Top	95
"E" Width	95
Weight kg (screwed & SW)	4,4

* Standard flanges are in carbon steel, stainless steel flanges are optional. Other flange sizes, ratings and face-to-face dimensions are available on request.

All sizes comply with the article 3.3 of the PED (97/23/EC).

Table ST-143-4. Model SH-900

Connections	15 – 20: Screwed NPT, BSPT, socketweld, flanged, buttweld	25: Flanged, buttweld
Material		
Body and Cap	ASTM A351 Gr. CF8M	
Valve	Titanium	
Seat		
Bimetallic Elements	Nickel-chrome and stainless steel	

All dimensions and weights are approximate. Use certified print for exact dimensions. Design and materials are subject to change without notice.

WT Series Thermostatic Wafer Steam Traps

Stainless Steel or Carbon Steel

For Pressures to 41 bar...Cold Water Start-Up Capacities to 730 kg/h

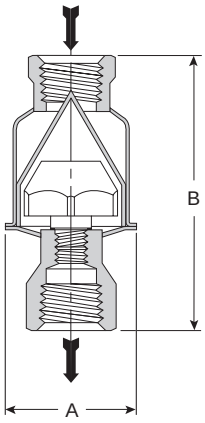

Model WT-1 Trap

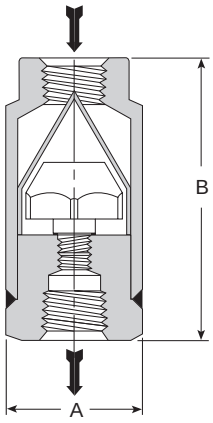

Model WT-3 Trap

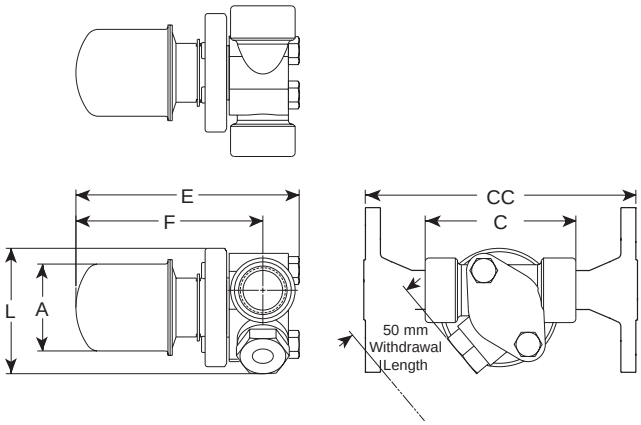

Model WT-2000 with IS-2 Connector with Integral Strainer

Description

Armstrong offers three thermostatic wafer steam traps. The WT-1 is ideal for low-capacity steam tracers and features an exclusive non-welded wafer design and internal strainer screen two to three times larger than that of other thermostatic traps in a sealed stainless steel body. Choice of NPT or BSPT screwed connections.

The WT-2000 does not have an internal strainer, but is equipped with a special 360° connector to expand piping options and simplify installation. Choice of NPT or BSPT screwed connections, or socketweld connections. Also available with optional IS-2 stainless steel connector with integral strainer.

Armstrong's WT-3 is a carbon steel thermostatic wafer trap for superheated drip service. It features an exclusive non-welded wafer design, which eliminates problems associated with weld stress. The WT-3 has no thin-walled enclosures such as bellows or welded diaphragms. It is also resistant to water hammer. Choice of NPT or BSPT screwed connections, or socketweld connections.

Note: Since the normal operation of all suppressed temperature-discharge (subcooling) steam traps is to back up condensate, they should not be used on drip legs for saturated steam service, heating or process equipment. Exercise care in the maintenance of any thermostatic wafer trap with a small discharge area susceptible to clogging.

Specification

Thermostatic wafer steam trap, type ... in stainless steel or carbon steel. Maximum allowable back pressure 99% of inlet pressure.

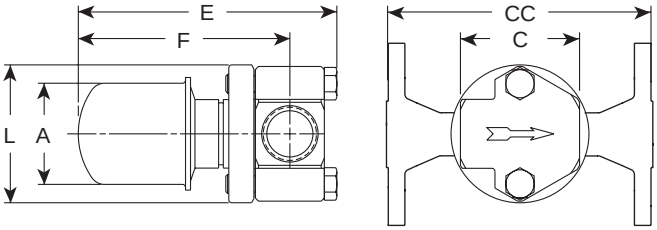

Model WT-2000 with Standard Connector

How to Order

Specify:

- Model number
- Size and type of pipe connection, or connector style
- Any options required

Table ST-144-1. WT Series Trap (dimensions in mm)

Model No.	WT-1		WT-3
Pipe Connections	1/2"	3/4"	1/2" – 3/4"
"A" Diameter	57	57	57
"B" Face-to-Face (screwed & SW)	114	119	118
Weight in kg (screwed & SW)	0,5	0,6	1,4

Table ST-144-2. WT Series Trap (dimensions in mm)

Model No.	WT-2000		
	Standard Connector	IS-2 Connector with Integral Strainer	
Pipe Connections	15 – 20 – 25	15 – 20	25
"A" Diameter	57	57	57
"C" Face-to-Face (screwed & SW)	60 – 60 – N/A	89	102
"CC" Face-to-Face (flanged PN40*)	150 – 150 – 160	150	160
"F" ℄ to Bottom End	108	111	111
"E" Overall Length	133	130	133
"L" Overall Height	72	72	72
Blowdown Connection	–	1/4"	1/4"
Weight in kg (screwed & SW)	1,4	1,5	1,5
Weight in kg (flanged PN40*)	3,8 – 4,0 – 4,2	3,2 – 3,8	4,3

* Standard flanges are in carbon steel, stainless steel flanges are optional. Other flange sizes, ratings and face-to-face dimensions are available on request.

All models comply with the article 3.3 of the PED (97/23/EC).



All dimensions and weights are approximate. Use certified print for exact dimensions. Design and materials are subject to change without notice.

Armstrong International SA • Parc Industriel des Hauts-Sarts (2e Avenue) • 4040 Herstal • Belgium
Tel.: +32 (0)4 240 90 90 • Fax: +32 (0)4 248 13 61
www.armstrong.be • marketing@armstrong.be

WT Series Thermostatic Wafer Steam Traps

Stainless Steel or Carbon Steel

For Pressures to 41 bar...Cold Water Start-Up Capacities to 730 kg/h

Table ST-145-1. WT Series Capacity

Differential Pressure*	Cold Water Start-Up 21°C	Hot Water Start-Up 100°C	Operating Condensate 10°C Below Saturation
bar	kg/h	kg/h	kg/h**
0,35	54	45	4,5
0,7	68	77	5,9
1,4	145	113	8,2
2,0	177	136	9,1
3,0	191	159	10,9
3,5	222	181	11,8
5,0	259	218	13,6
7,0	295	263	15,9
10,5	318	318	18,1
14,0	408	363	20,9
17,0	454	431	22,7
21,0	476	465	25,4
24,0	522	544	28,6
28,0	590	567	31,8

* Capacities based on differential pressure with no back pressure.
** Capacities will vary with the degree of subcooling. When greater capacities are required, the trap will automatically adjust to the load, up to the maximum (cold water) capacity shown, by increasing the amount of subcooling.

Connectors

Besides the inverted bucket traps, the standard connectors or IS-2 connector with integral strainer can also be used on thermostatic, thermostatic wafer and controlled disc traps.



Table ST-145-2.

Model	WT-1 All Stainless Steel	WT-2000 Stainless Steel w/360° Connector	WT-3 Carbon Steel
Design	Welded		
Connections	Screwed BSPT and NPT – Socketweld – Flanged (WT-2000 only)		
Material			
Body	ASTM A240 – 304L		Carbon Steel C-1018
Cap			
Capsule wafer	Hastelloy		
Capsule body	Stainless Steel – 303		
Capsule cap			
Connector			
Standard	–	Stainless Steel – 304	–
IS-2 w/integral strainer	–	ASTM A351 Gr.CF8 w/20x20 mesh 304 SS screen	–
Maximum operating conditions			
Maximum allowable pressure (vessel design)	28 bar @ 343°C		41 bar @ 399°C
Maximum operating pressure	28 bar		41 bar
Options WT-2000			
Blowdown Valve IS-2 Connector Only			
Plug for IS-2 Strainer Blowdown Connection			

Maximum back pressure: 99% of inlet pressure

All dimensions and weights are approximate. Use certified print for exact dimensions. Design and materials are subject to change without notice.

MT Series Thermostatic Wafer Steam Traps

Stainless Steel or Carbon Steel

For Pressures to 24 bar…Cold Water Start-up Capacities to 450 kg/h

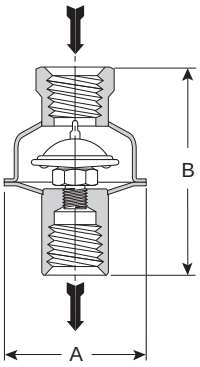

Model WMT-1 Trap

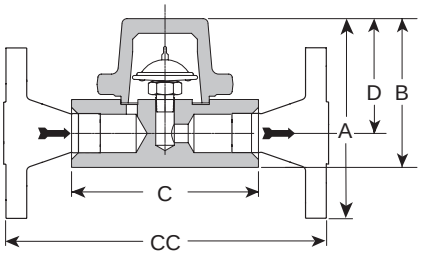

Model MT-2-AB Trap

Description

The thermostatic wafer steam trap, the Series MT-2-AB, is sized precisely to handle the extremely low condensate load found in most instrument steam tracer lines. The MT thermostatic wafer traps are designed to last longer than other oversized, all-purpose thermostatic and thermodynamic steam traps.

A water seal prevents loss of steam through the orifice of the MT Series.

Adjusts automatically to flow rates, including large start-up loads, at all pressures within its range.

Specification

Thermostatic wafer steam trap, type WMT-1 in stainless steel or MT-2-AB in carbon steel. Maximum allowable back pressure 99% of inlet pressure.

How to Order

- Specify model number
- Specify size and type of pipe connection. When flanges are required, specify type of flange in detail

Table ST-146-2. WMT-1 Trap (dimensions in mm)

Model No.	WMT-1	
Pipe Connections	1/4" - 3/8"	1/2"
"A" Diameter	57	57
"B" Face-to-Face (screwed & SW)	84	84
Weight in kg (screwed & SW)	0,1	0,1

Table ST-146-3. Model MT-2-AB Trap (dimensions in mm)

Model No.	MT-2-AB
Pipe Connections	15 – 20 – 25
"B" Height (screwed & SW)	77,5
"C" Face-to-Face (screwed & SW)	88 – 88 – N/A
"CC" Face-to-Face (flanged PN40*)	150 – 150 – 160
"D" ℄ to Top	60
Weight in kg (screwed & SW)	1,7
Weight in kg (flanged PN40*)	4,1 – 4,3 – 4,5

* Other flange sizes, ratings and face-to-face dimensions are available on request.

All models comply with the article 3.3 of the PED (97/23/EC).

Table ST-146-4. MT-2-AB and WMT-1 Traps

Model	WMT-1	MT-2-AB
Connections	Screwed BSPT and NPT	Screwed BSPT, Socketweld, Flanged
Material		
Cap and Body	ASTM A240 to 304L	Carbon Steel
Capsule	All stainless steel – 304	
Maximum Operating Conditions		
Maximum allowable pressure (vessel design)	17 bar @ 204°C	40 bar @ 400°C
Maximum operating pressure	17 bar	

Maximum back pressure: 99% of inlet pressure

Table ST-146-1. MT Series Capacity

Differential Pressure*	Cold Water Start-Up 21°C	Hot Water Start-Up 100°C	Operating Condensate 10°C Below Saturation
bar	kg/h	kg/h	kg/h**
0,35	54	45	4,5
0,7	68	77	5,9
1,4	145	113	8,2
2,0	177	136	9,1
3,0	191	159	10,9
3,5	222	181	11,8
5,0	259	218	13,6
7,0	295	263	15,9
10,5	318	318	18,1
14,0	408	363	20,9
17,0	454	431	22,7

* Capacities based on differential pressure with no back pressure.

** Capacities will vary with the degree of subcooling. When greater capacities are required, the trap will automatically adjust to the load, up to the maximum (cold water) capacity shown, by increasing the amount of subcooling.

All dimensions and weights are approximate. Use certified print for exact dimensions. Design and materials are subject to change without notice.

Armstrong International SA • Parc Industriel des Hauts-Sarts (2e Avenue) • 4040 Herstal • Belgium
Tel.: +32 (0)4 240 90 90 • Fax: +32 (0)4 248 13 61
www.armstrong.be • marketing@armstrong.be

TS Series Radiator Traps

Bronze

For Pressures to 4,5 bar…Capacities to 730 kg

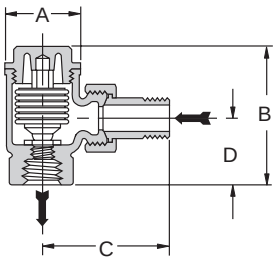

TS-2 Trap Angle Type

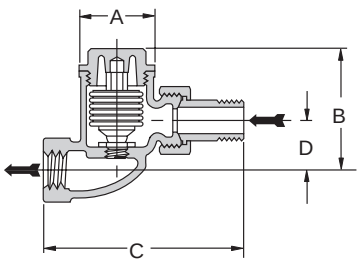

TS-2 Trap Straight Type

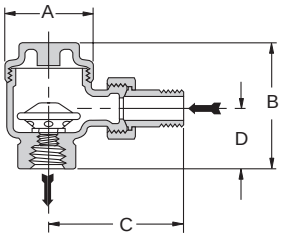

TS-3 Trap Angle Type

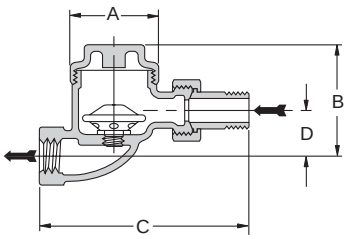

TS-3 Trap Straight Type

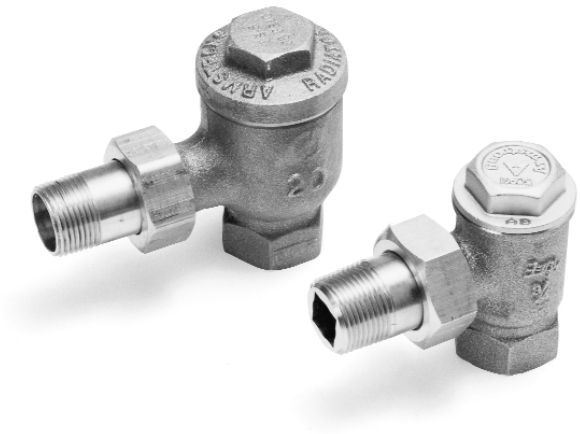

Armstrong Series TS radiator traps are offered in both angle and straight patterns. The TS-2 has a balanced pressure thermostatic element with a high quality multiple-convolution bellows. It's ideal for draining equipment such as steam radiators and convectors, small heat exchangers, unit heaters and steam air vents. The TS-2 comes with a strong, cast bronze body and a stainless seat. The valve and seat are renewable in-line.

The TS-3 is a heavy duty, wafer type trap for the drainage of all types of steam radiators and convectors. Its wafer design is well suited to systems prone to water hammer, which may damage conventional bellows type units. The TS-3 is repairable in-line and has an all-stainless steel wafer element.

Materials

Cap:	Bronze, ASTM B 62
Body:	Bronze, ASTM B 62
Union Nipple:	Brass, ASTM B 584
Valve:	
Model TS-2:	Brass
Model TS-3:	Stainless steel
Valve Seat:	Stainless steel
Element:	
Model TS-2:	Phosphor-bronze bellows
Model TS-3:	T-316 SS Wafer w/T-304 SS Housing

Connections

Screwed BSPT and NPT

Table ST-147-2. TS Series Capacity

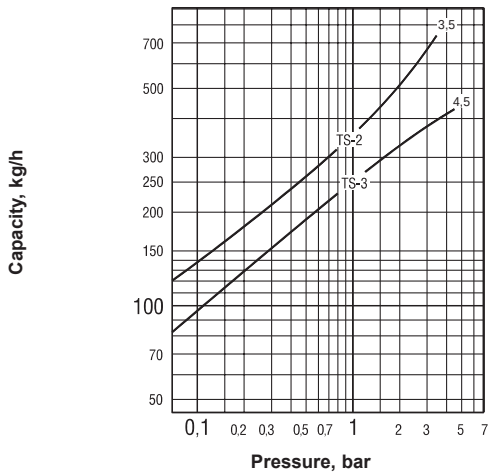

Maximum Operating Conditions

Maximum allowable pressure (vessel design):	
Model TS-2:	3,5 bar @ 149°C
Model TS-3:	4,5 bar @ 157°C
Maximum operating pressure:	
Model TS-2:	3,5 bar
Model TS-3:	4,5 bar
Maximum back pressure:	99% of inlet pressure

Table ST-147-1. TS Series Radiator Trap (dimensions in mm)

Model	TS-2				TS-3					
Type	Angle		Straight		Angle			Straight		
Pipe Connections	15	20	15	20	15	20	25	15	20	25
"A" Diameter	41,3	41,3	41,3	41,3	50,8	50,8	60,3	50,8	50,8	60,3
"B" Height	74,6	76,2	68,3	73,0	73,0	92,1	98,4	66,7	85,7	88,9
"C"	65,1	73,0	101,6	114,3	79,4	88,9	105,0	124,0	133,0	165,0
"D"	34,9	41,3	28,6	33,3	34,9	41,3	50,8	28,6	34,9	41,3
Weight in kg (screwed)	0,7	0,8	0,7	0,9	0,7	0,9	1,1	0,7	1	1,4

All models comply with the article 3.3 of the PED (97/23/EC).

All dimensions and weights are approximate. Use certified print for exact dimensions. Design and materials are subject to change without notice.

TT Series Thermostatic Bellows Steam Traps

All Stainless Steel

For Pressures to 20 bar...Capacities to 1 570 kg/h

Description

The balanced pressure bellows thermostatic steam trap has a sealed, stainless-steel body that is lightweight, compact and highly resistant to corrosion. The cage, bellows, valve and seat are all assembled into a precisely calibrated operating unit that ensures positive opening and closing action at slightly below steam temperature. The unique, stainless-steel construction is smaller and much lighter than comparable cast iron, brass or steel traps. TTF-1 is available with straight-thru or right angle connections. TT-2000 with the 360° universal stainless steel connector comes with either a standard connector or the IS-2 connector with integral strainer.

Note: Can also be used as a thermostatic air vent (Reference TTF Series Thermostatic Air Vents page AV-328).

Specification

Thermostatic steam trap, type ... in stainless steel. Maximum allowable back pressure 99% of inlet pressure.

How to Order

Specify:

- Model number
- Size and type of pipe connection
- Connector type (TT-2000)

Connections

Screwed BSPT and NPT
TT-2000: Socketweld
TT-2000: Flanged DIN or ANSI (welded)

Materials

Body:	304L Stainless steel
Connector:	304 Stainless steel (TT-2000)
Bellows:	Stainless steel and bronze with phosphor-bronze bellows, caged in stainless steel

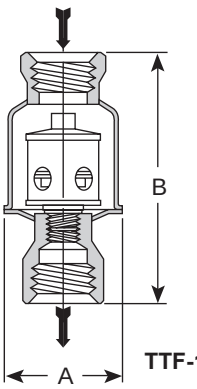

TTF-1 Trap

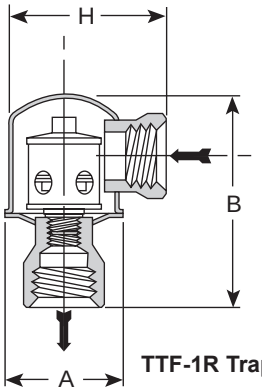

TTF-1R Trap



Model TT-2000 with Standard Connector

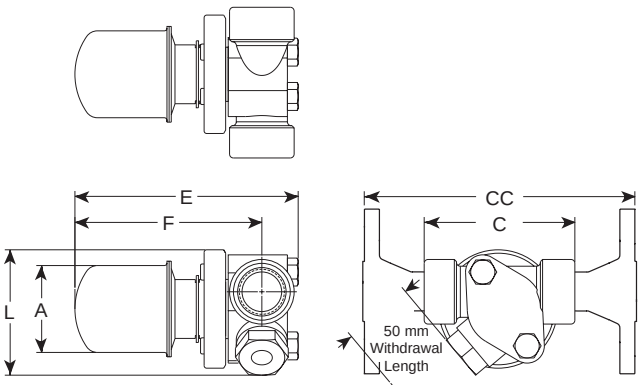

Model TT-2000 with Standard Connector

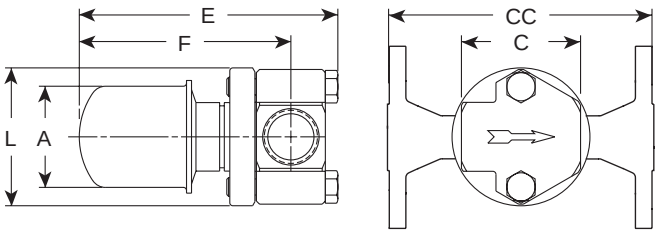

Model TT-2000 with IS-2 Connector with Integral Strainer

Table St-148-1. TTF Series Trap (dimensions in mm)

Model No.	TTF-1 Straight-Thru Connections		TTF-1R Right-Angle Connections		TT-2000		
					Standard Connector	IS-2 Connector with Integral Strainer	
Pipe Connections	15	20	15	20	15 – 20 – 25	15 – 20	25
"A" Diameter	57	57	57	57	57	57	57
"B" Height	114	119	95	100	–	–	–
"C" Face-to-Face (screwed & SW)	–	–	–	–	60 – 60 – N/A	89	102
"CC" Face-to-Face (flanged PN40*)	–	–	–	–	150 – 150 – 160	150	160
"E" Overall Length	–	–	–	–	133	130	133
"F" ℄ to to Body End	–	–	–	–	108	111	111
"L" Overall Height	–	–	–	–	72	72	72
"H" Width for angle connection	–	–	78	76	–	–	–
Weight in kg (screwed & SW)	0,4	0,5	0,4	0,5	1,4	1,5	1,5
Weight in kg (flanged PN40*)	–	–	–	–	3,8 – 4,0 – 4,2	3,2 – 3,8	4,3

* Standard flanges are in carbon steel, stainless steel flanges are optional. Other flange sizes, ratings and face-to-face dimensions are available on request.
All models comply with the article 3.3 of the PED (97/23/EC).

All dimensions and weights are approximate. Use certified print for exact dimensions. Design and materials are subject to change without notice.

Armstrong International SA • Parc Industriel des Hauts-Sarts (2e Avenue) • 4040 Herstal • Belgium
Tel.: +32 (0)4 240 90 90 • Fax: +32 (0)4 248 13 61
www.armstrong.be • marketing@armstrong.be

TT Series Thermostatic Bellows Steam Traps

All Stainless Steel

For Pressures to 20 bar...Capacities to 1 570 kg/h

Table ST-149-1.			
Model	**TTF-1**	**TTF-1R**	**TT-2000**
Design	Welded		
Connections	Screwed BSPT and NPT – Socketweld – Flanged (TT-2000 only)		
Material			
Body	ASTM A240 – 304L		
Valve	Bronze		
Seat	Stainless Steel		
Thermostatic air vent	Standard Stainless steel & bronze w/phosphor bronze bellows caged in stainless steel		
Optional: All stainless steel thermostatic air vent			
Connector			
Standard	–	–	Stainless steel – 304
IS-2 w/integral strainer	–	–	ASTM A351 Gr.CF8 w/20x20 mesh 304 SS screen
Maximum Operating Conditions			
Maximum allowable pressure (vessel design)	20 bar @ 232°C		
Maximum operating pressure	20 bar		
Maximum operating temperature bellows	190°C		

Maximum back pressure: 99% of inlet pressure

Table ST-149-2. TTF Series Capacity

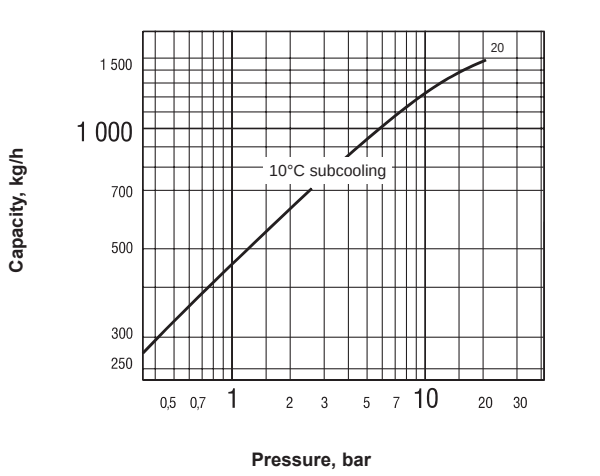

Table ST-149-3. Model TT-2000 Capacity

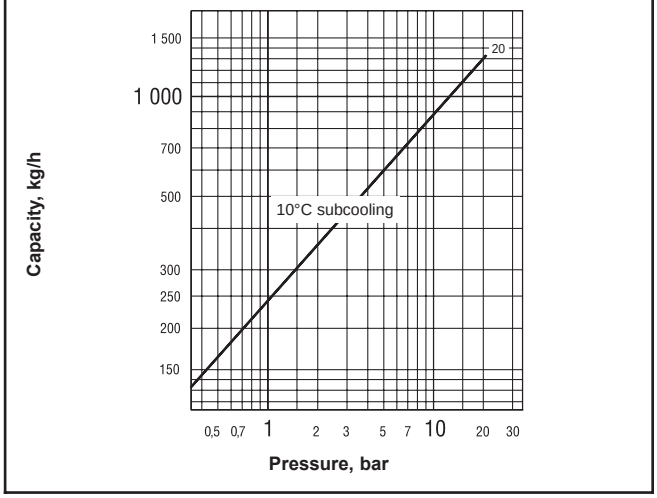

All dimensions and weights are approximate. Use certified print for exact dimensions. Design and materials are subject to change without notice.

TC Series Clean Steam Thermostatic Traps

Stainless Steel 316L

For Pressures to 8,3 bar…Capacities to 1 700 kg/h

Armstrong offers a complete range of T-316L stainless steel clean steam thermostatic traps to handle the special requirements of clean steam systems. Different body configurations allow for choice of piping and ease of cleaning.

The thermostatic design is free-draining and can operate close to steam temperature at any given pressure.



Features:

- Constructed of 316L stainless steel for corrosion resistance
- Highly polished for cleanability
- Self-draining to minimize contamination
- Compact and lightweight
- Easy to install
- Provide easy disassembly for cleaning

Typical Applications:

- Fermentors
- Sterilizers/autoclaves
- Process piping
- Block and bleed
- Bioreactors
- CIP/SIP systems
- Equipment sterilization
- Sterile barriers

How to Order:

Specify:

- Model number
- Pipe connection size
- End connection type

Example:

TC-C, 1/2" sanitary end connections.

Table ST-150-1. TC Series Clean Steam Traps Materials

Model	TC-C Clamp	TC-R Repairable	TC-S Sealed
Cap and body	ASTM A479 316L		
Bellows	316L stainless steel		
Body gasket	Viton		–
Retainer	Stainless steel		
Clamp	Stainless steel	–	–
Screws	–	Stainless steel	–
Finish	180 grit electro polish to 20 ra or below inside, and 150 grit electro polish to 30 ra or below on outside	–	–

All models comply with the article 3.3 of the PED (97/23/EC).

Table ST-150-2. TC Series Clean Steam Traps Physical Data

Model	TC-C Clamp	TC-R Repairable	TC-S Sealed
Maximum Allowable Pressure (Vessel Design)	8,3 bar		10 bar
Maximum Allowable Temperature	177°C		186°C
Maximum Operating Pressure	7 bar		8,3 bar
Weight in kg	0,57	0,68	0,34

Maximum back pressure: 99% of inlet pressure

Table ST-150-3. TC Series Capacity

Differential Pressure* bar	5°C Subcool kg/h	11°C Subcool kg/h**
0,35	82	145
0,7	163	293
1,4	307	503
2,1	458	709
2,8	561	830
3,5	699	915
4,1	837	1 136
4,8	924	1 210
5,5	1 071	1 356
6,2	1 116	1 468
6,9	1 155	1 565
7,6	1 184	1 651
8,3	1 206	1 712

* Capacities based on differential pressure with no back pressure.
** Capacities will vary with the degree of subcooling. When greater capacities are required, the trap will automatically adjust to the load, up to the maximum (cold water) capacity shown, by increasing the amount of subcooling.

All dimensions and weights are approximate. Use certified print for exact dimensions. Design and materials are subject to change without notice.

Armstrong International SA • Parc Industriel des Hauts-Sarts (2e Avenue) • 4040 Herstal • Belgium
Tel.: +32 (0)4 240 90 90 • Fax: +32 (0)4 248 13 61
www.armstrong.be • marketing@armstrong.be

TC Series Clean Steam Thermostatic Traps

Stainless Steel 316L

For Pressures to 8,3 bar…Capacities to 1 700 kg/h

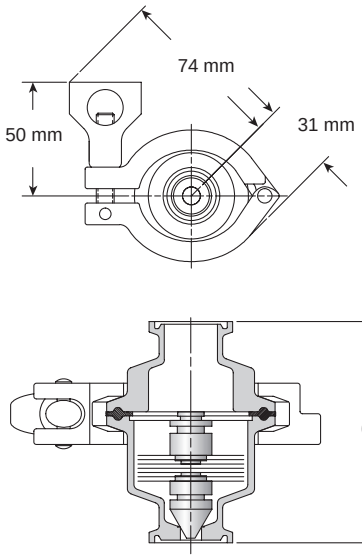

Model TC-C Clamp
With Sanitary Body Clamp
1/2", 3/4 and 1" Sanitary End Connections

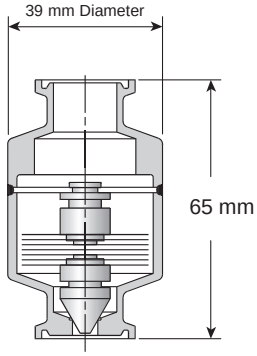

Model TC-S Sealed
1/2" and 3/4"
Sanitary End Connections

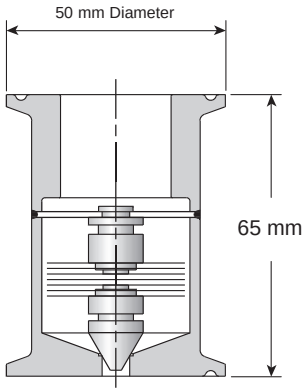

Model TC-S Sealed
1"
Sanitary End Connections

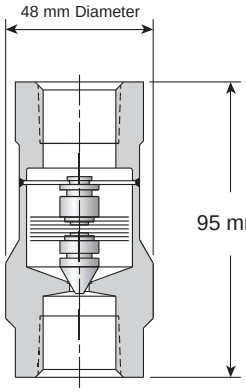

Model TC-S Sealed
1/2" and 3/4"
Threaded End Connections

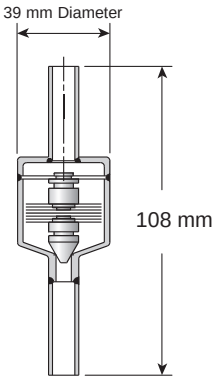

Model TC-S Sealed
1/2" and 3/4"
Tube End Connections

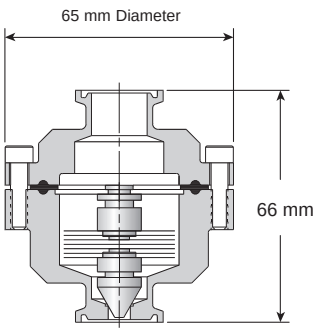

Model TC-R Repairable
With Bolted Body and Cap
1/2", 3/4 and 1"
Sanitary End Connections

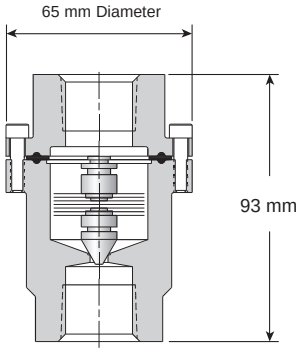

Model TC-R Repairable
With Bolted Body and Cap
1/2" and 3/4"
Threaded End Connections

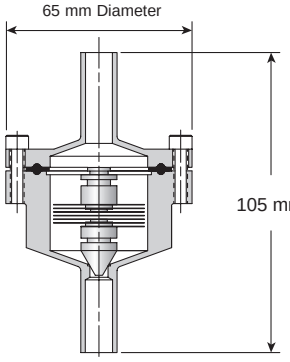

Model TC-R Repairable
With Bolted Body and Cap
1/2" and 3/4"
Tube End Connections

All dimensions and weights are approximate. Use certified print for exact dimensions. Design and materials are subject to change without notice.

TrapAlert™

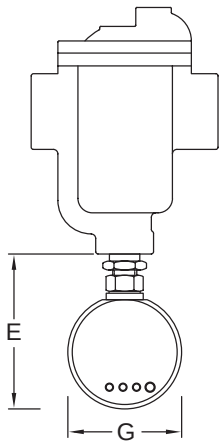

Model 811PC with TA4200 TrapAlert

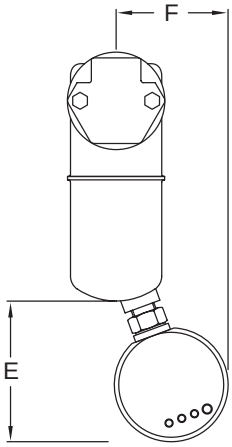

Model 2011PC with TA4200 TrapAlert



Get Your Share of Energy and Maintenance Savings. Do Your Part in Protecting the Environment.

TrapAlert saves energy and maintenance dollars because it simplifies trap testing and makes it more efficient – more productive. It makes trap testing simple, accurate and quick – even for remote or inaccessible traps. And that means frequent testing is now practical because you can test more often at far less cost.

With TrapAlert, you can have an inside view of trap conditions. You'll know when a trap needs attention. So you can use maintenance people to solve real problems, instead of spending their expensive time checking traps that are working.

You Get Instant Results.

Simple, accurate operation makes getting instant feedback from a trap test as easy as shining a flashlight.

With TrapAlert, you can know when a trap is in trouble – depending, of course, on how often you choose to test. Think of it as a trap with a built-in energy monitor. Knowing what's going on inside is the only way to know what to do about it – and when.

TrapAlert Outsmarts Even the Most Isolated Trap

TrapAlert provides a trap testing and monitoring system without the need to hard-wire multiple traps. Designed for services up to 28 bar and temperatures to 232°C, TrapAlert is also intrinsically safe for use in Class I, II or III, Division I, Groups A through G hazardous locations.

TA4200 TrapAlert

Model TA4200 is ideal for traps isolated high above the floor, under equipment or otherwise out of reach. The TA4200 TrapAlert makes testing a trap as easy as turning on a flashlight. The beam of a flashlight on TrapAlert's photodetector energizes TrapAlert's five-year lithium battery, which powers small indicator lights. Any flashlight will work close up, but for longer distances – even up to 15 meters – use a focusable high intensity model.

When a flashlight beam strikes the photodetector of the TA4200, the monitor responds instantly with one or more colored lights, indicating different trap conditions. A green light is a good or "go" condition. Yellow means a cold trap. And a red light signals loss of prime or blow-thru.

Flexible mounts on lights and photodetector permit angling them away from building lights. They can be adjusted down for a high trap location or up for a low trap.

Table ST-152-1. TrapAlert – List of Materials

Printed Circuit Board	Potted – EL Cast VFR
Probe Core	303 Stainless Steel
Probe Sleeve	Teflon®
Probe Hex Bushing	304 Stainless Steel

Table ST-152-2. Trap-Alert – Technical Data

Probe Power	3,5 VDC @ 1 Milliamp
Battery Life Replaceable	4 - 5 years (based on 3 activations per month)
Ambient Temperature Range	-46°C to 66°C at or above 2 bar
Recommended Light Source	High intensity focusable halogen flashlight
Activation Range (Model TA4200)	Up to 15 meters

Table ST-152-3. TrapAlert Physical Data (dimensions in mm)

Model No.	Series 800PC	Series TVS800PC	2011PC	2022PC	1811PC	1822PC
"E" Probe Height	113	113	102	102	102	102
"F" Centerline to Outside	–	–	81	81	81	–
"G" Width	83	83	83	83	83	83
Maximum Allowable Pressure of TrapAlert	28 bar @ 232°C					

See the steam trap section for steam trap dimensions

All dimensions and weights are approximate. Use certified print for exact dimensions. Design and materials are subject to change without notice.

Armstrong International SA • Parc Industriel des Hauts-Sarts (2e Avenue) • 4040 Herstal • Belgium
Tel.: +32 (0)4 240 90 90 • Fax: +32 (0)4 248 13 61
www.armstrong.be • marketing@armstrong.be

TrapAlert™ Selection and Ordering

TrapAlert

1. **Determine Steam Trap Model(s) Required**
   TrapAlert may be ordered for installation with Armstrong cast iron inverted bucket steam trap models 800, 811, 812, 813, 814, 815 and 816 and stainless steel model numbers 1811, 1822, 2011 and 2022.

   - Refer to the appropriate steam trap section to select and size the correct steam trap model for your application(s).

   - Specify: Trap model number followed by the suffix PC.

   Example: 800PC

   Pipe connection size and type.

   Example: 3/4" NPT

   Maximum operating pressure at which trap will be used (or orifice size).

   Example: Model 800PC, 3/4" NPT, 2 bar

TrapAlert Only

When ordering, use the model number TA4200 – Indoor Only (flashlight activation) for the TrapAlert, followed by the trap it will be used with.

Example: TA4200-800

All dimensions and weights are approximate. Use certified print for exact dimensions. Design and materials are subject to change without notice.

Steam Trap Options and Connectors

Thermic Vent Buckets

Whenever steam is turned on and off, air will accumulate in the piping and steam equipment. A trap equipped with a thermic bucket will discharge this air 50 to 100 times faster than a standard bucket, reducing warm-up time. Thermic vent buckets are suitable for pressures up to 9 bar. A large vent hole in the bucket can also solve air venting problems upon start-up.

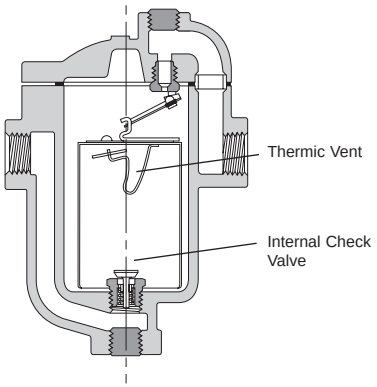

Internal Check Valves – 1/2" Thru 2" NPT

Almost all Armstrong inverted bucket steam traps can be equipped with internal check valves. A check valve is needed between the trap and the equipment being drained in the following cases:

- When the trap is installed above the unit drained
- When sudden pressure drops may occur in the steam supply to the unit
- Whenever a back pressure exists in the condensate return line

Armstrong spring-loaded, stainless-steel internal check valves can be screwed directly into the trap inlet or into an extended inlet tube having a pipe coupling at the top.

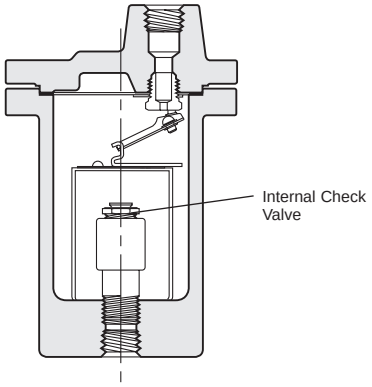

"In-Line" Check Valve – 1/2" and 3/4" NPT

On 1800 and 2000 Series stainless-steel traps, an internal check valve cannot be installed. Armstrong's CVI "in-line" check valve will solve the problem.

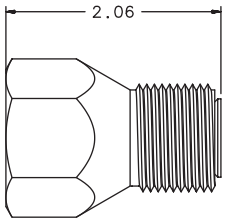

Pop Drain for Freeze Protection

In general, a properly selected and installed Armstrong trap will not freeze as long as steam is coming to the trap. If the steam supply is shut off, a pop drain should be used to automatically drain the trap.

Maximum Operating Conditions

Pressure:	41 bar
Temperature:	177°C

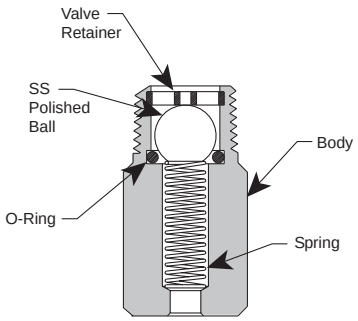

All dimensions and weights are approximate. Use certified print for exact dimensions. Design and materials are subject to change without notice.

Armstrong International SA • Parc Industriel des Hauts-Sarts (2e Avenue) • 4040 Herstal • Belgium
Tel.: +32 (0)4 240 90 90 • Fax: +32 (0)4 248 13 61
www.armstrong.be • marketing@armstrong.be

Steam Trap Options and Connectors

Vacuum Breaker – 3/8'' and 1/2'' NPT

Many times, condensate will be retained ahead of steam traps because of the presence of a vacuum. To break a vacuum, air must be introduced into the system by means of a vacuum breaker.

For maximum protection against freezing and water hammer in heating coils under modulated control, for example, vacuum breakers are recommended in conjunction with freeze protection devices.

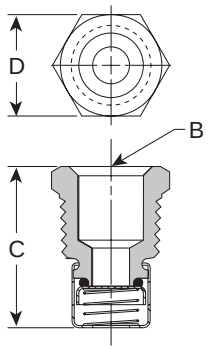

Table ST-155-1. Vacuum Breaker

Size	1/2" NPT	3/8" NPT
"B" Pipe Connections	3/8"	1/4"
"C" Height	30	28
"D" Width	22 Hex	17 Hex

Bucket Vent Scrubbing Wire (BVSW) solves dirt problems

Whenever dirt plugs the bucket vent, Armstrong recommends the use of a scrubbing wire which, on each cycle, keeps the bucket vent hole open. **Note**: On small size stainless-steel (only) bucket traps, a wiggle wire is installed as standard.

In normal conditions, the inverted bucket trap is not sensitive to dirt problems (because of its orifice at the top of the trap), unlike most other traps, which should be installed normally with a strainer (see Armstrong "Y" Type Strainers Selection Table on page S-311).

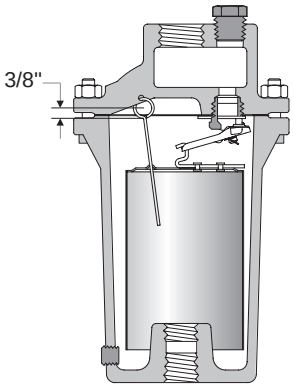

Connectors

Besides 2000 Series stainless steel inverted bucket traps, the standard connector or IS-2 connector with integral strainer can also be used on F&T-2000 float and thermostatic, AB-2000 bimetallic, TT-2000 bellows, WT-2000 wafer and CD-3300 controlled disc traps.



Standard Connector
Material: 316 Stainless Steel



IS-2 Connector with Integral Strainer
(shown with optional blowdown valve)
Material: 316 Stainless Steel

Probe Connections

Probe Connections are available for trap monitoring on most inverted bucket traps. Consult your Armstrong Factory Representative.

Table ST-155-2. Socketweld Dimensions

Pipe Size	S-2	S-4 Min.
in	mm	mm
1/2"	22	10
3/4"	27	13
1"	34	13
1 1/4"	43	13
1 1/2"	49	13
2"	61	16
2 1/2"	74	16
3"	90	16

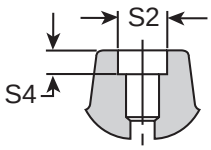

Socketweld Connection

All dimensions and weights are approximate. Use certified print for exact dimensions. Design and materials are subject to change without notice.

