Condensate Recovery Equipment

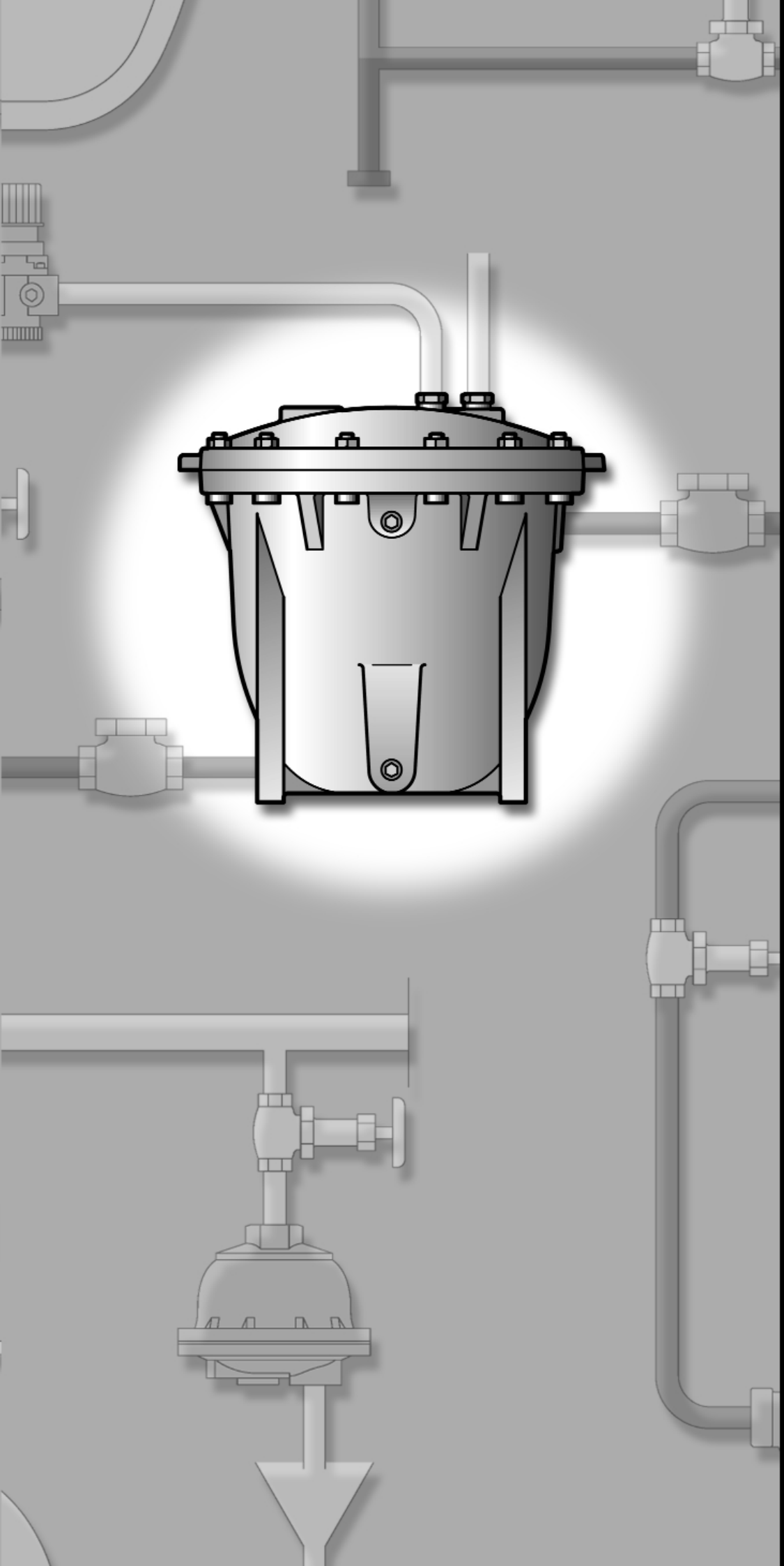

Armstrong

Armstrong®
Intelligent System Solutions™
STEAM • AIR • HOT WATER

Armstrong® Pumping Traps

Inside Advantages

Mechanical condensate pumps operate with a spring-assisted float mechanism, which means the springs themselves are a major wear point. Armstrong pumping traps have large-diameter Inconel X-750 springs, which provide superior corrosion resistance and longer service life than those in competitive models. For other inside advantages, see below.



Notice the difference in spring design from the industry standard spring set (left) and the Armstrong Inconel spring set.

Non-electric and no cavitation
Utilizes inexpensive steam, air or gas for operation and has no seals, motors, impellers or electric components, which frequently fail due to cavitation.

Externally replaceable valve and seat assembly
Maintenance is a "snap" with hardened stainless steel valves that can be cleaned or replaced without cap removal.

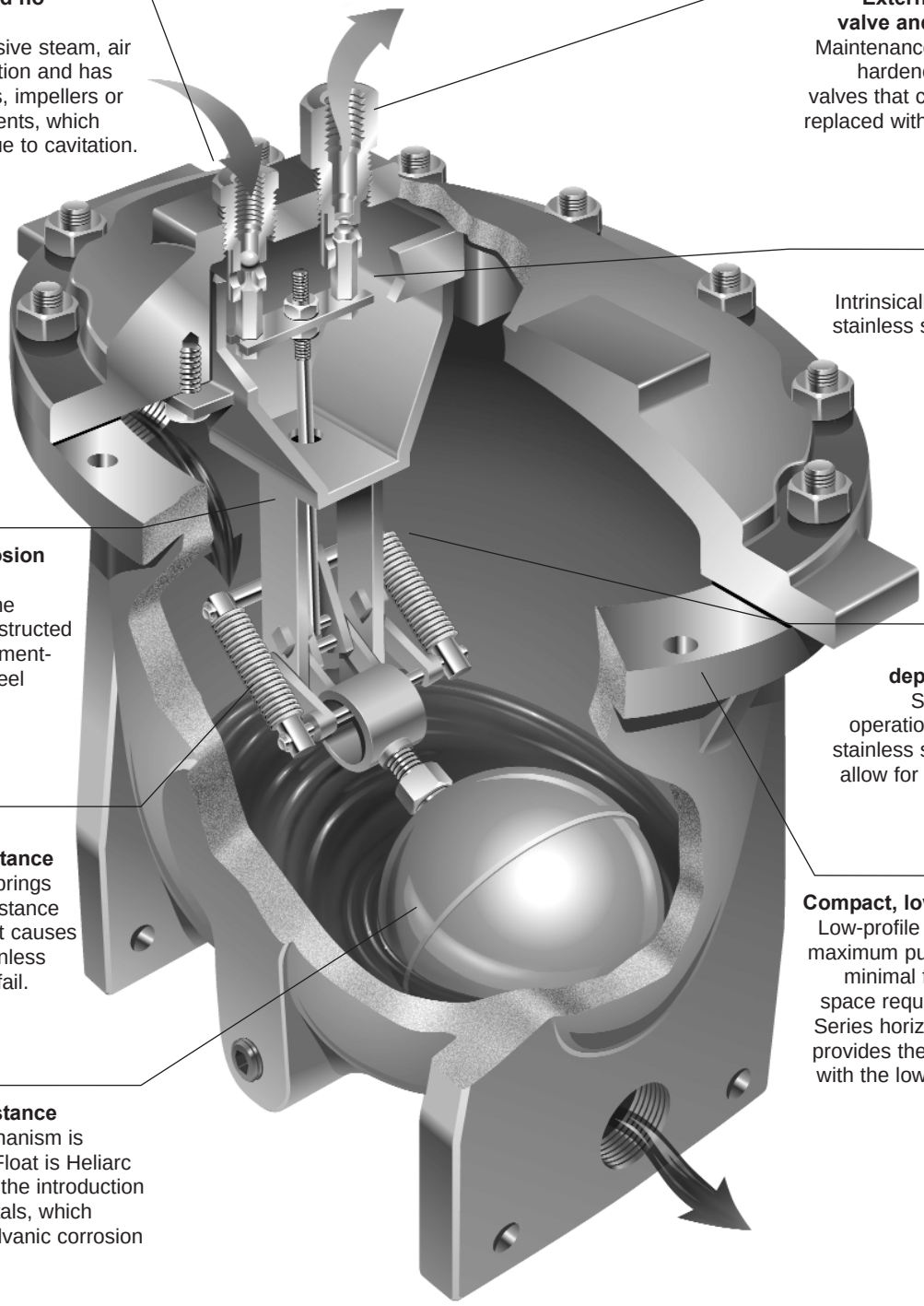

Explosion proof
Intrinsically safe due to all-stainless steel construction of mechanism.

Wear and corrosion resistance
Mechanism frame assembly is constructed of rugged investment-cast stainless steel components.

Long life and dependable service
Simple float/spring operation and rugged all-stainless steel construction allow for long, trouble-free service life.

Stress chloride corrosion resistance
Inconel X-750 springs have higher resistance to the stress that causes lower-grade stainless steel springs to fail.

Compact, low-profile design
Low-profile design allows for maximum pump capacity with minimal fill head and floor space requirements. PT-300 Series horizontal tank design provides the highest capacity with the lowest profile on the market.

Corrosion resistance
Entire float mechanism is stainless steel. Float is Heliarc welded to avoid the introduction of dissimilar metals, which could lead to galvanic corrosion and float failure.

Armstrong International SA • Parc Industriel des Hauts-Sarts (2e Avenue) • 4040 Herstal • Belgium
Tel.: +32 (0)4 240 90 90 • Fax: +32 (0)4 248 13 61
www.armstrong.be • marketing@armstrong.be

Effective Condensate Management = Energy Savings

The most basic part of energy management is utilizing all valuable kJ within the steam system. Depending on the pressure, condensate exiting a trap contains approximately 20% of the heat energy transferred at the boiler in the form of sensible heat. Effective recovery of condensate reduces four tangible costs of producing steam:

- Fuel/energy costs and CO_2 emissions associated with producing steam
- Boiler water make-up and sewage treatment
- Boiler water chemical treatment
- Boiler blow-down rate

These savings can be calculated using the attached savings form. Returning condensate saves money, energy and the environment. Pour money and energy savings back into your plant – not down the drain.

Condensate Recovery Savings Analysis Location _____ Building _____

Energy costs will vary from plant to plant and regions of the world. Values shown are conservative. Complete this form using your facilities' numbers to determine annual savings in your plant by returning condensate. If some costs are not known, use the figures below for conservative estimates.

A) Condensate Load ..... = 2 m³/h

B) Annual Hours of Operation ..... = 5 000 h/year

C) Total Water and Sewage Cost ..... = 1,0 € per m³
c1) Untreated water and sewage ..... = 0,5 € per m³
c2) Water treatment chemicals ..... = 0,5 € per m³

D) Make-Up Water Preheating Requirements . = 314 kJ/kg
d1) Condensate Return Temperature ..... = 90°C
d2) Make-Up Water Temperature ..... = 15°C

E) Steam Cost ..... = 15 € per ton
e1) Steam Pressure ..... = 3 bar
e2) Enthalpy at 3 bar ..... = 2 738 kJ/kg

F) Annual Water Savings ..... = 10 000 €

$$\frac{(A)2 \times (B)5\,000 \times (C)1{,}0}{}$$

G) Savings for Preheating Make-Up Water ... = 17 606 €

$$\frac{(A)2 \times (B)5\,000 \times (D)314 \times (E)15}{(e2)2\,738 - ((d2)15 \times 4{,}186)}$$

H) Cost of Steam to Operate†
Armstrong Pump Trap ..... = 450 €

$$\frac{3 \text{ kg steam/m}^3 \times (A)2 \times (B)5\,000 \times (E)15}{1\,000}$$

I) Total Dollars Saved Annually (F + G - H) . = 27 156 €

J) Payback Period in Years ..... = 67 Days

$$\frac{**(\text{cost of equipment/installation})5\,000\ €}{(I)27\,156}$$

** Estimated equipment and installation cost
† Cost to operate in example assumes an "open" vented system. If pump trap is used in "closed loop" application, energy of motive steam is completely used in the system.

Pumping Trap Operation

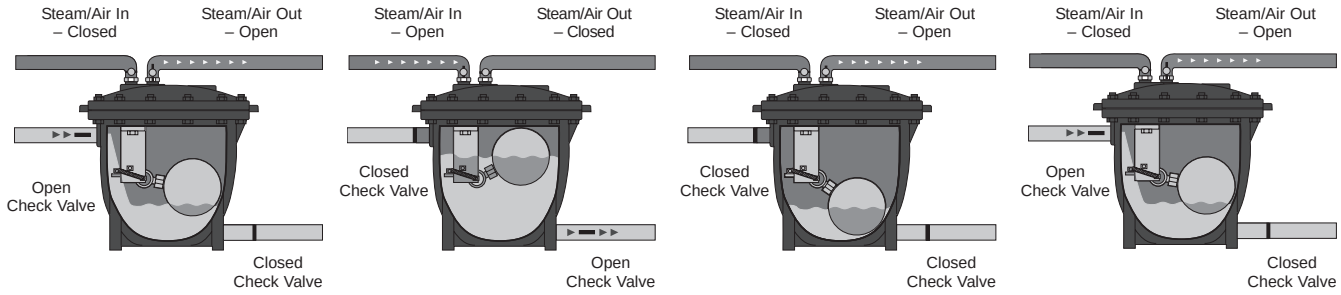

Filling
1. During filling, the steam or air inlet and check valve on pumping trap outlet are closed. The vent and check valve on the inlet are open.

Begin Pumping
2. Float rises with level of condensate until it passes trip point, and then snap action reverses the positions shown in step one.

End Pumping
3. Float is lowered as level of condensate falls until snap action again reverses positions.

Repeat Filling
4. Steam or air inlet and trap outlet are again closed while vent and condensate inlet are open. Cycle begins anew.

Armstrong® Condensate Recovery Equipment ID Charts

Table CRE-186-1. Armstrong Condensate Recovery Equipment

Illustration	Type	Connection Type	Max. Allow. Press. barg	TMA °C	Body Material	Mechanism Material	Model	Max. Oper. Press. barg	Capacity Range (condensate) kg/h	Connection Size				Located on Page
										1"	1 1/2"	2"	3" x 2"	
	**Model PT-104** Pumping Trap	PN40 Flanged	10	232	ASTM A48 Class 30 Cast Iron	Stainless Steel Inconel X-750 Spring	**PT-104**	6	900	●				CRE-196
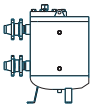	**Series EPT-200** Pumping Trap	PN40 Flanged	10	343	Fabricated Steel P265GH / P275H	Stainless Steel Inconel X-750 Spring	**EPT-204** **EPT-206**	9	1 716 2 620	● 	 ●			CRE-190
	**Series EPT-400** Pumping Trap	PN40 Flanged	10	343	Fabricated Steel P265GH / P275H AD-Merkblätter	Stainless Steel Inconel X-750 Spring	**EPT-404** **EPT-406** **EPT-408** **EPT-412**	9	2 520 3 705 5 000 7 310	●	 ●	 ●	 ●	CRE-192
	**Series PT-300** Pumping Trap	PN40 Flanged	10	343	Fabricated Steel 10 bar ASME Sec. VIII "U" Stamped	Stainless Steel Inconel X-750 Spring	**PT-308** **PT-312**	9	9 040 6 840			● 	 ●	CRE-194
	**Model PT-516** Pumping Trap	150# ANSI Flanged	10	277	Fabricated Steel 10 bar ASME Sec. VIII Design "U" Stamped	Stainless Steel with Stainless Steel Springs	**PT-516**	10	35 920	4" x 4"				CRE-198
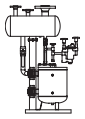	**Series 200 and 400** Open System Packages	PN40 Flanged	10	232	Fabricated Steel P265GH / P275H	Stainless Steel Inconel X-750 Spring	**SEPT-206-OS** **SEPT-412-OS**	9	2 620 7 310		● 		 ●	CRE-202 CRE-206
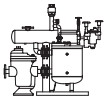	**Series 200 and 400** Closed System Packages	PN40 Flanged	10	232	Fabricated Steel P265GH / P275H	Stainless Steel Inconel X-750 Spring	**SEPT-206-CS** **SEPT-412-CS**	9	2 620 7 310		● 		 ●	CRE-204 CRE-208
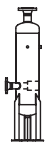	**Series EAFT** Flash Tanks	PN40 Flanged	10	260	Fabricated Steel P265GH / P275H AD-Merkblätter		**EAFT-6** **EAFT-8** **EAFT-12** **EAFT-16**	10	900 2 270 4 540 9 070	Inlet: 50 - Vent: 65 Inlet: 80 - Vent: 100 Inlet: 100 - Vent: 150 Inlet: 150 - Vent: 150				CRE-210

Table CRE-186-2. Stainless Steel Sump Ejector

Illustration	Type	Connection Type	Max. Allow. Press. barg	TMA °C	Body Material	Mechanism Material	Model	Maximum Operating Pressure barg	Capacity Range m^3/h	Discharge	Steam Inlet	Located on Page
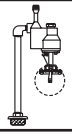	**Stainless Steel Sump Ejector**	Screwed	12	67 Water	ASTM A351 CF8M	Stainless Steel Inconel X-750 Spring	**Sump Ejector**	12	3	3/4" MNPT	1/2" NPT	CRE-212

Table CRE-186-3. Posi-Pressure Draining System

Illustration	Type	Fluid	Connection Type	Max. Allow. Press. barg	TMA °C	Body Material	Model	Maximum Operating Pressure barg	Connection Size	Located on Page
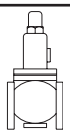	**GD-22** Posi-Pressure Regulator	Air	Screwed	10	80	Cast Iron	**GD-22**	10	1/2"	CRE-214

All models comply with the Pressure Equipment Directive PED 97/23/EC. For details, see specific product page or Armstrong PED Certificate.

Armstrong International SA • Parc Industriel des Hauts-Sarts (2e Avenue) • 4040 Herstal • Belgium
Tel.: +32 (0)4 240 90 90 • Fax: +32 (0)4 248 13 61
www.armstrong.be • marketing@armstrong.be

Sizing and Selection – PT-100/200/300/3500/400 Series

The Armstrong non-electric pump trap is sized based on actual condensate load (kg/h) being pumped. The following steps are used to size the pump.

1. Determine the total condensate load to be pumped in kg/h. See conversion factors tables on specific product page.
2. Determine the total back pressure the pump will operate against. Total back pressure is the sum of the following:
   - Vertical lift expressed in barg (10 m lift = 1 barg).
   - Existing pressure in condensate return line or D.A. tank
   - Frictional loss from pipe, valves and fittings
3. Determine type of motive gas to be used (steam, air or other inert gas) and pressure available.

Example:
- Condensate load = 1 100 kg/h.
- Total back pressure = 1,5 barg (5 m vertical lift = 0,5 barg, 1 barg in condensate return line).
- Motive pressure is steam at 3,5 barg.

Solution: Model EPT-206
Find 1,5 barg total lift or back pressure in column two of EPT-200 Pumping Trap Capacities table on page CRE-191. Then find 3,5 barg motive pressure in column one. Move across the capacity table until you reach a model number with the correct capacity. An EPT-206 has been highlighted above for this example.

Either a closed reservoir pipe or a vented receiver is required for proper condensate storage during the pump-down cycle of the pumping trap.

For vented / open system receiver sizing:
- Determine the pressure from where the condensate is being discharged.
- Determine condensate load.

Reference Percentage of Flash Steam chart on page CRE-200 to find the pressure that corresponds with the discharge condensate pressure. For this example, use 1,0 barg.

Follow 1,0 barg on the horizontal axis where it intersects the curve. Move left from the intersecting lines to the vertical axis for the percentage of flash steam that is created. For this example it will be 3% (see shaded area on Percentage of Flash Steam chart).

Multiply 3% by the condensate load. Using example above:
1 100 kg/h x 0,03 = 33 kg/h flash steam

Using the Vented Receiver Sizing table CRE-200-2 on page CRE-200, find the amount of flash steam in column one. Follow the table across to determine the size of the vented receiver. (See shaded area on Vented Receiver Sizing table CRE-200-2 for this example.)

For closed reservoir piping:
- Determine condensate load (using example above 1 100 kg/h).

Reference the inlet reservoir pipe sizing table CRE-200-1 for closed systems on page CRE-200. Find 1 100 kg/h in column one. Move horizontally across to find proper pipe size. (Note length or diameter may be slightly enlarged when capacity falls between given condensate loads in column one.) Selection is shaded.

Accessories

Use of external check valves required for operation of pumping trap.

Insulation Jacket

Features
- Lower risk of injury
- Higher energy efficiency
- Delays potential freezing

Gauge Glass Assembly

Features:
- Condensate load monitoring
- Allows troubleshooting not only of the pump, but also of the installation upward

Note: The above applies to all models.

Digital Cycle Counter

Features
- Totalizer is UL recognized, CSA certified
- 5-year lithium battery life
- Eight-digit counter readout
- Both totalizer and housing are Nema 4 rated, for protection against dust particles and water
- Easily installed on pumping traps
- Optional auxiliary contacts available upon request
- Push-button reset on face or key lock reset for security

Reference Bulletin No. AFH-237.



- Rated for temperatures up to 178°C
- Closed loop option available

General Applications

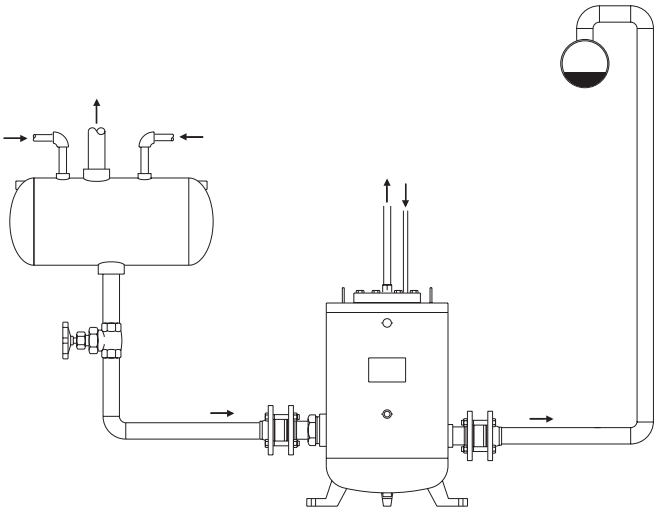

Multiple or single traps discharging to vented receiver.

OPEN SYSTEMS

For the majority of applications, a steam trap is recommended on each piece of heat exchange equipment. The steam trap, or traps, discharge to a vented receiver where flash steam will be vented to the atmosphere. The pump trap is located downstream and below the vented receiver, allowing for proper fill head height. See table CRE-200-2 for vented receiver and vent sizing for an open system.

Note: Drip trap on pump motive line may be discharged into the receiver, the return line or to the drain.

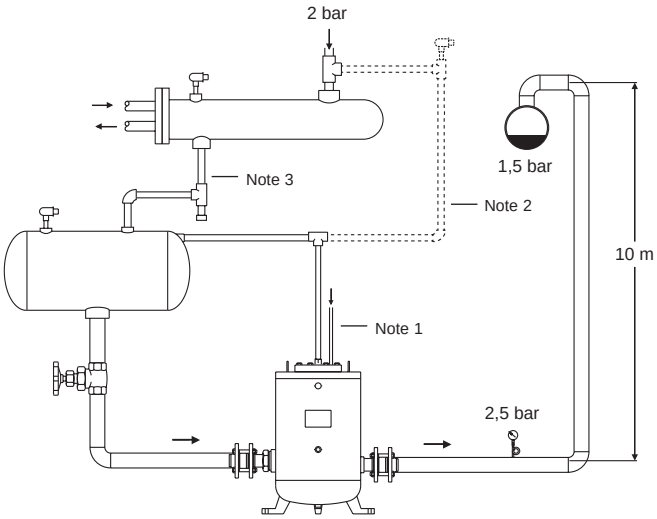

Draining steam coil or heat exchanger when pressure is lower than return line pressure. Note that a steam trap is not required in this application, as differential pressure is always negative. For more details, see installation and operation manuals.

CLOSED SYSTEMS

Applications exist where it is desirable to tie the vent line back into the heat exchange space, equalizing the pressure in the heat exchanger, reservoir/piping and the pump trap. This allows water to flow by gravity down to the pump where it can be returned. Valuable kJ remain within the system due to no flash steam loss to the atmosphere through the vent. Closed system applications can also be used to drain liquid from the equipment under a vacuum. See table CRE-200-1 for reservoir pipe sizing.

Note 1: If steam motive is used, the drip trap may be discharged into the return line or to the drain.

Note 2: Vent piping from the pump trap can be connected to the inlet side of the equipment being drained if the pressure drop across the equipment is less than 0,03 bar and there is a minimum of 600 mm of fill head present.

Note 3: A vacuum breaker might be installed to protect the heat exchanger if the vent piping from the pump trap is connected to the receiver. If the equipment modulated down to a sub-atmospheric condition, the vacuum breaker will open to equalize the system and provide adequate drainage.

Condensate Drainage From Temperature Controlled Equipment

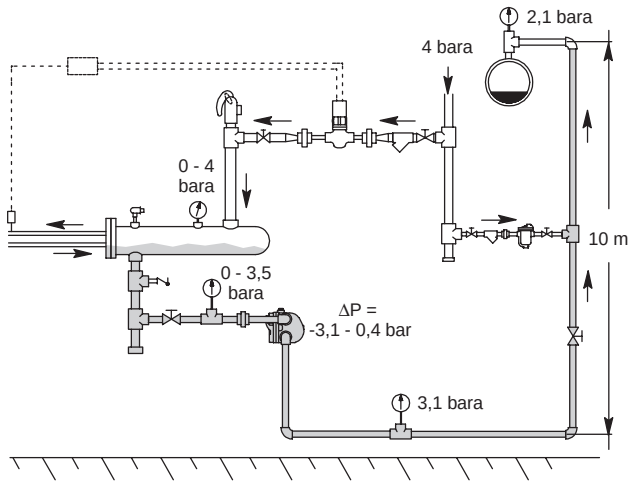

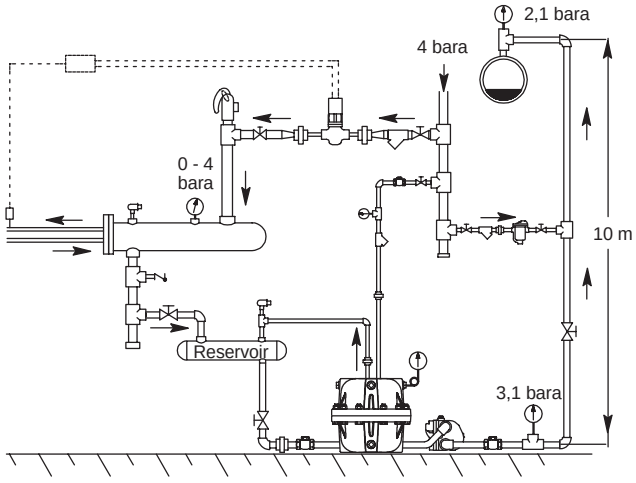

Problem: "Stall" Condition on Modulated Steam Control

Modulated steam controls are required to change steam pressure in the heat exchanger to control accurate product output temperature. Due to these varying steam pressure changes, a stall condition exists in all heat exchangers where condensate cannot flow through the steam trap due to insufficient or even negative pressure differential. Under the stall condition, partial or complete flooding will occur. Reference figure above noting the stall conditions and problems that can occur.

Armstrong Solution

The combination of Armstrong pump trap and Armstrong steam trap is the total solution to the stall condition by removing condensate under all system conditions. When the steam system pressure is sufficient to overcome the back pressure, the steam trap operates normally. When the system pressure falls to the stall condition, the pump trap operates and pumps condensate through the steam trap. Temperature control and condensate drainage are assured under all system conditions.

Note: The pump trap is sized for the stall conditions.

Problems

1. Stall condition – no condensate drainage due to insufficient pressure to move condensate through the steam trap
2. Heat exchange equipment floods causing equipment damage from:
   - Water hammer due to steam and condensate occupying the same space
   - Corrosion due to carbonic acid forming from sub-cooled condensate reabsorbing trapped carbon dioxide and non-condensable gases
3. Inaccurate temperature control

Stall Calculation

Use of the stall chart on right will determine the point where flooding will occur.

Application information required:	**Example**
Ps = Max. Steam Pressure in heat exchanger	1 barg
ts = Maximum Steam Temperature	120°C
Qs = Maximum Steam Flow	1 000 kg/h
or	
Qs = Total Power of Heat Exchanger (kW)	
Pb = Back Pressure	0,3 barg
tb = Corresponding temperature	107°C
t1 = Inlet Product Temperature	15°C
t2 = Outlet Product Temperature	60°C

Qcr= Critical (Stall) Load

Stall Calculation:

$$Q_{cr} = \frac{t_b - \Delta t}{t_s - \Delta t} \times Q_s$$

$$= \frac{107°C - 45°C}{120°C - 45°C} \times 1000 \text{ kg/h}$$

$$= \frac{62°C}{75°C} \times 1000 \text{ kg/h}$$

$$= 826 \text{ kg/h}$$

Stall Information:

- When the control valve allows more than 826 kg/h of steam to enter into the heat exchanger, **differential pressure will be positive**. Steam trap should be able to discharge 826 kg/h at 0,1 bar differential pressure.

- When the control valve allows less than 826 kg/h of steam to enter into the heat exchanger, **differential pressure will be negative**. Condensate pump should be able to discharge 826 kg/h with 1 barg motive pressure and 0,3 barg back pressure.

- If the heat exchanger is oversized by 20%, it would be able to handle up to 1 200 kg of steam per hour. The stall will appear at 84,25%, which means 1 011 kg/h. As only 1 000 kg/h are needed to heat the maximum product load at the maximum differential temperature, the **pressure differential will always be negative**. In that case, the steam trap is not needed (see closed systems on page CRE-188).

EPT-200 Series Pumping Trap

Carbon Steel, Same Side Connections

For capacities up to 2 620 kg/h (steam motive)... Discharge per cycle 19 liters

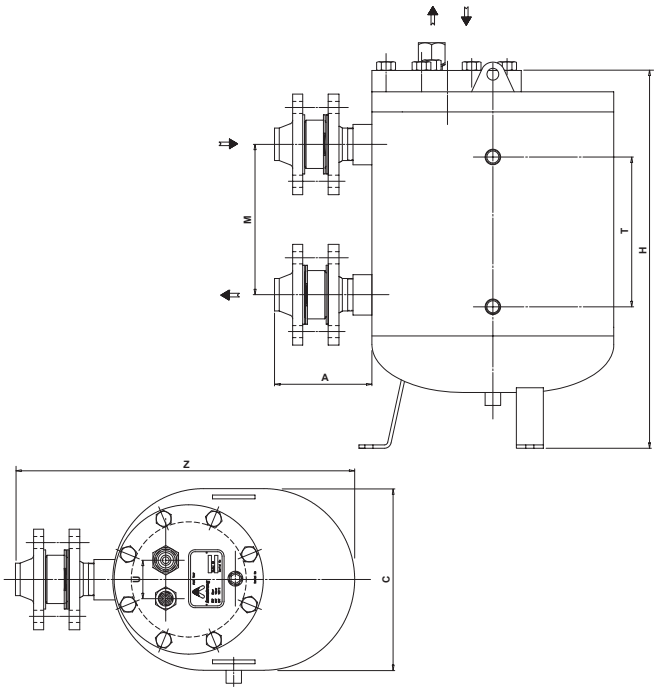



The Armstrong EPT-200 Series Vertical Pumping Trap is a low maintenance, non-electric solution to move condensate or other liquids from low points, low pressures or vacuum spaces to an area of higher elevation or pressure. Condensate can be returned well above the 99°C limit of conventional electric condensate pumps without the headaches of leaking seals or cavitation problems.

Features

- Non-electric – Uses inexpensive steam, air or gas to operate the pump trap
- Low profile – For tight space requirements (min. 550 mm)
- Explosion proof – Intrinsically safe
- Durable carbon steel body for long service life
- Low maintenance – No leaking seals, impeller or motor problems
- All stainless steel internals with durable Inconel X-750 springs
- Externally removable/replaceable seats – Valve and seats can be replaced or cleaned without removing pump cap from body

Table CRE-190-1. EPT-200 Pumping Trap Physical Data

Model Number	EPT-204	EPT-206
	mm	mm
“C”	270	270
“H”	550	550
“T”	224	224
“U”	57	57
“M”	224	224
“A”	129	145
“Z”	489	505
Cap Removal	400	400
Weight (kg)	50	51
Number of Cap Bolts	8	8

Maximum Allowable Pressure (Vessel Design) 10 bar @ 343°C.
Maximum Operating Pressure 9 bar.
All models are CE Marked according to the PED (97/23/EC).

All dimensions and weights are approximate. Use certified print for exact dimensions. Design and materials are subject to change without notice.

Armstrong International SA • Parc Industriel des Hauts-Sarts (2e Avenue) • 4040 Herstal • Belgium
Tel.: +32 (0)4 240 90 90 • Fax: +32 (0)4 248 13 61
www.armstrong.be • marketing@armstrong.be

EPT-200 Series Pumping Trap

Carbon Steel, Same Side Connections

For capacities up to 2 620 kg/h (steam motive)... Discharge per cycle 19 liters

Table CRE-191-1. EPT-200 Pumping Trap Materials	
Body and Cap	Fabricated Steel P265GH/P275H
Cap Gasket	Compressed Non-Asbestos
Bolts	SA - 193 gr B7
Inlet Valve Assembly	Stainless Steel
Vent Valve Assembly	Stainless Steel
Valve Assembly Washers	Zinc-Plated Steel
Mechanism Assembly	Cast Stainless Steel
Plug	Steel
Springs	Inconel X-750

Table CRE-191-2. EPT-200 Pumping Trap Connection Sizes		
	EPT-204	**EPT-206**
Inlet	DN 25	DN 40
Inlet Check Valve	DN 25	DN 40
Outlet	DN 25	DN 40
Outlet Check Valve	DN 25	DN 40
Motive Valve	1/2" BSPT	
Vent Valve	1" BSPT	
Body Drain	1/2" NPT	
Gauge Glass	1/2" BSPT	
Cycle Counter	1/2" BSPT	

Table CRE-191-3. EPT-200 Pumping Trap Capacities (300 mm Filling Head)

Motive Pressure	Total Lift or Back Pressure	EPT-204 DN 25 x DN 25		EPT-206 DN 40 x DN 40	
		Steam	Air	Steam	Air
bar	bar	kg/h	kg/h	kg/h	kg/h
1,0	0,35	980	1 145	1 470	1 635
1,7		1 105	1 250	1 740	1 905
3,5		1 200	1 360	1 850	1 960
5,0		1 240	1 470	1 905	2 015
7,0		1 290	On request	1 960	On request
8,5		1 320	On request	2 015	On request
1,7	1,0	815	1 090	1 305	1 470
3,5		1 090	1 225	1 740	1 850
5,0		1 145	1 360	1 795	1 905
7,0		1 180	On request	1 825	On request
8,5		1 200	On request	1 850	On request
2,5	1,5	820	925	1 150	1 250
3,5		930	1 090	1 310	1 415
5,0		1 050	1 250	1 470	1 580
7,0		1 130	On request	1 600	On request
8,5		1 275	On request	1 650	On request
3,5	3,0	760	925	850	1 090
4,0		815	1 090	1 090	1 250
5,0		925	1 200	1 250	1 360
7,0		980	On request	1 375	On request
8,5		1 045	On request	1 430	On request
4,5	4,0	625	1 090	750	1 090
5,0		720	1 250	900	1 250
7,0		900	On request	1 200	On request
8,5		935	On request	1 280	On request

Notes: Above capacities are the results of **actual** steam testing using a minimum 93°C condensate. Published capacities are based on the use of external check valves supplied by Armstrong. Fill head measured from drain point to top of pump cap. Discharge per cycle: 19 liters.
Shadow shows cells used for the selection example on page CRE-187.

Table CRE-191-4. EPT-200 Capacity Conversion Factors for other Fill Heads

Model	Filling Head (mm)				
	0	150	300	600	900
EPT-204	0,65	0,90	1,00	1,20	1,30
EPT-206	0,65	0,90	1,00	1,20	1,30

Note: Filling head is measured from drain of receiver to top of pump's cap.

Options

- Gauge Glass Assembly with Guards (Brass or Cadium Plated Carbon Steel)
- Digital Cycle Counter (Open or Closed Systems; with or without Auxiliary contacts)
- Insulation Jacket

This pump might be suitable for special applications. Please consult factory

All dimensions and weights are approximate. Use certified print for exact dimensions. Design and materials are subject to change without notice.

EPT-400 Series Pumping Trap

Carbon Steel, In-Line Connections

For capacities up to 7 310 kg/h (steam motive)... Discharge per cycle 29 liters

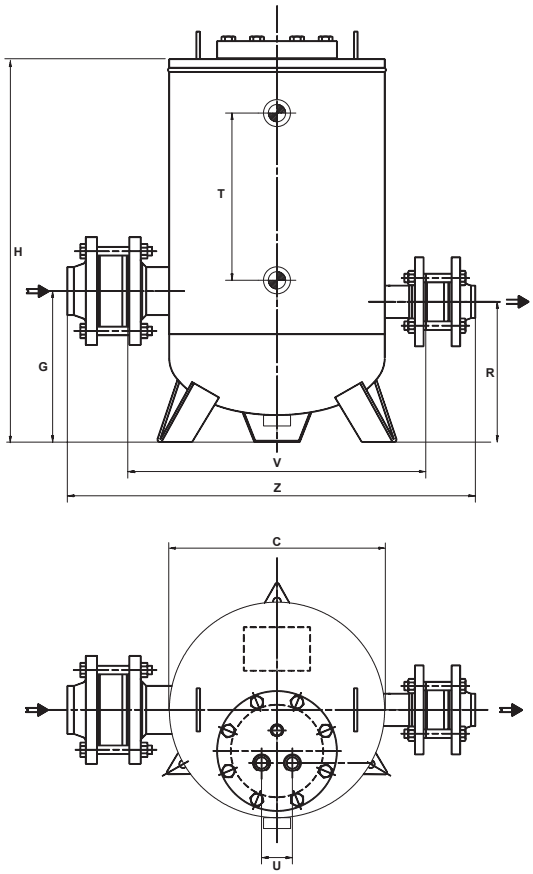



The Armstrong EPT-400 Series Vertical Pump Trap is the low maintenance, non-electric solution to move condensate or other liquids from low points, low pressures or vacuum spaces to an area of higher elevation or pressure. Condensate can be returned at temperatures well above the 99°C limit of conventional electric condensate pumps without the headaches of leaking seals or cavitation problems.

Features

- Non-electric – Uses inexpensive steam, air or gas to operate the pump trap
- Explosion proof – Intrinsically safe
- AD-Merkblätter carbon steel or stainless steel body vessel
- Low maintenance – No leaking seals, impeller or motor problems
- All stainless steel internals with durable Inconel X-750 springs
- Externally removable/replaceable seats – Valve and seats can be replaced or cleaned without removing pump cap from body

Table CRE-192-1. EPT-400 Pumping Trap Physical Data

Model Number	EPT-404	EPT-406	EPT-408	EPT-412
	mm	mm	mm	mm
“C” (diameter)	400	400	400	400
“G”	260	260	260	260
“H”	710	710	710	710
“R”	240	240	240	240
“T”	305	305	305	305
“U”	57	57	57	57
“V”	552	552	552	552
“Z”	680	710	730	750
Cap Removal	400	400	400	400
Weight (kg)	67	71	75	88
Number of Cap Bolts	8	8	8	8

Maximum Allowable Pressure (Vessel Design) 10 bar @ 343°C.
Maximum Operating Pressure 9 bar.
All models are CE Marked according to the PED (97/23/EC).

All dimensions and weights are approximate. Use certified print for exact dimensions. Design and materials are subject to change without notice.

Armstrong International SA • Parc Industriel des Hauts-Sarts (2e Avenue) • 4040 Herstal • Belgium
Tel.: +32 (0)4 240 90 90 • Fax: +32 (0)4 248 13 61
www.armstrong.be • marketing@armstrong.be

EPT-400 Series Pumping Trap

Carbon Steel, In-Line Connections

For capacities up to 7 310 kg/h (steam motive)... Discharge per cycle 29 liters

Table CRE-193-1. EPT-400 Pumping Trap Connection Sizes

	EPT-404	EPT-406	EPT-408	EPT-412
Inlet	DN 25	DN 40	DN 50	DN 80
Inlet Check Valve	DN 25	DN 40	DN 50	DN 80
Outlet	DN 25	DN 40	DN 50	DN 50
Outlet Check Valve	DN 25	DN 40	DN 50	DN 50
Motive Valve	1/2" BSPT			
Vent Valve	1" BSPT			
Body Drain	1/2" NPT			
Gauge Glass	1/2" BSPT			
Cycle Counter	1/2" BSPT			

Table CRE-193-2. EPT-400 Pumping Trap Materials

Body and Cap	Fabricated Steel P265GH/P275H AD-Merkblätter
Cap Gasket	Compressed Non-Asbestos
Bolts	SA - 193 gr B7
Inlet Valve Assembly	Stainless Steel
Vent Valve Assembly	Stainless Steel
Valve Assembly Washers	Zinc-Plated Steel
Mechanism Assembly	Cast Stainless Steel
Plug	Steel
Springs	Inconel X-750

Table CRE-193-3. EPT-400 Pumping Trap Capacities (300 mm Filling Head)

Motive Pressure	Total Lift or Back Pressure	EPT-404 DN 25 x DN 25		EPT-406 DN 40 x DN 40		EPT-408 DN 50 x DN 50		EPT-412 DN 80 x DN 50	
		Steam	Air	Steam	Air	Steam	Air	Steam	Air
bar	bar	kg/h	kg/h	kg/h	kg/h	kg/h	kg/h	kg/h	kg/h
1,0	0,35	945	1 120	1 545	1 670	2 245	2 420	3 740	4 045
1,7		1 250	1 320	2 290	2 430	3 295	3 495	5 490	5 815
3,5		1 545	1 610	2 440	2 454	3 540	3 680	5 840	6 060
5,0		1 695	1 750	2 595	2 645	3 590	3 695	5 990	6 160
7,0		1 750	On request	2 695	On request	3 640	On request	6 040	On request
8,5		1 800	On request	2 745	On request	3 695	On request	6 090	On request
1,7	1,0	1 100	1 260	1 750	2 010	2 695	3 090	3 590	4 130
3,5		1 300	1 400	2 045	2 210	3 145	3 395	5 190	5 615
5,0		1 400	1 475	2 195	2 370	3 245	3 445	5 390	5 715
7,0		1 545	On request	2 400	On request	3 345	On request	5 490	On request
8,5		1 595	On request	2 440	On request	3 395	On request	5 590	On request
2,5	1,5	1 000	1 170	1 445	1 710	2 095	2 470	3 445	4 070
3,5		1 200	1 335	2 000	2 245	2 895	3 195	4 840	5 410
5,0		1 300	1 400	2 145	2 270	2 990	3 245	4 990	5 440
7,0		1 400	On request	2 345	On request	3 050	On request	5 090	On request
8,5		1 450	On request	2 980	On request	3 195	On request	5 190	On request
3,5	3,0	945	1 170	1 595	2 025	2 170	2 675	2 895	3 555
4,0		1 100	1 300	1 800	2 125	2 545	3 000	3 445	4 070
5,0		1 200	1 335	2 000	2 235	2 845	3 185	3 790	4 240
7,0		1 250	On request	2 095	On request	2 990	On request	4 045	On request
8,5		1 350	On request	2 245	On request	3 095	On request	4 240	On request
4,5	4,0	900	1 200	1 595	2 145	1 900	2 520	2 500	3 315
5,0		1 000	1 220	1 750	2 320	2 045	2 580	2 695	3 445
7,0		1 360	On request	1 850	On request	2 245	On request	2 995	On request
8,5		1 200	On request	1 900	On request	2 395	On request	3 195	On request

Notes: Above capacities are the results of **actual** steam testing using a minimum 93°C condensate. Published capacities are based on the use of external check valves supplied by Armstrong. Fill head measured from drain point to top of pump cap. Discharge per cycle: 29 liters.

Table CRE-193-4. EPT-400 Capacity Conversion Factors for Other Fill Heads

Model	Filling Head (mm)				
	0	150	300	600	900
EPT-404	0,70	0,85	1,00	1,30	1,40
EPT-406	0,70	0,85	1,00	1,20	1,35
EPT-408	0,70	0,70	1,00	1,20	1,35
EPT-412	0,70	0,85	1,00	1,08	1,20

Note: Filling head is measured from drain of receiver to top of pump's cap.

Options

- Stainless 316L Body and Cap
- Gauge Glass Assembly with Guards (Brass or Cadium Plated Carbon Steel)
- Digital Cycle Counter (Open or Closed Systems; with or without Auxiliary contacts)
- Insulation Jacket

This pump might be suitable for special applications. Please consult factory

All dimensions and weights are approximate. Use certified print for exact dimensions. Design and materials are subject to change without notice.

Armstrong International SA • Parc Industriel des Hauts-Sarts (2e Avenue) • 4040 Herstal • Belgium
Tel.: +32 (0)4 240 90 90 • Fax: +32 (0)4 248 13 61
www.armstrong.be • marketing@armstrong.be

PT-300 Series Pumping Trap

Carbon Steel, In-Line Connections

For capacities up to 9 040 kg/h (steam motive)... Discharge per cycle 45 liters

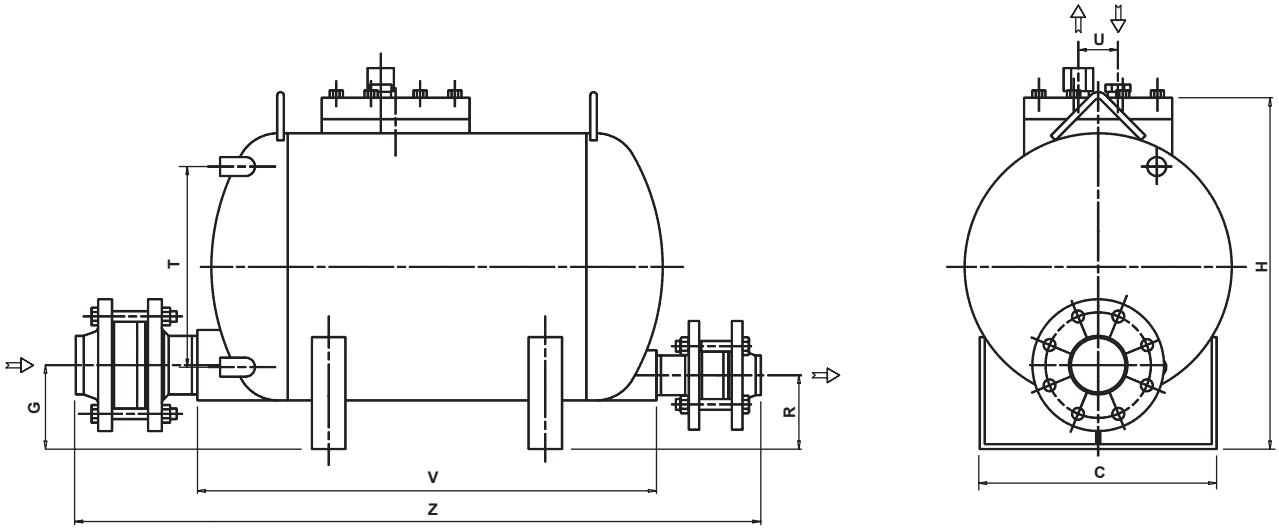

The Armstrong PT-300 Series Horizontal, Low Profile Pump Trap is the low maintenance non-electric solution to move condensate or other liquids from low points, low pressures or vacuum spaces to an area of higher elevation or pressure. Condensate can be returned at temperatures well above the 99°C limit of conventional electric condensate pumps without the headaches of leaking seals or cavitation problems.



Features

- Non-electric – Uses inexpensive steam, air or gas to operate the pump trap
- Low profile – For tight space requirements
- High capacity – Provides highest capacity in the industry, moving 45 liters per pump cycle
- Explosion proof – Intrinsically safe
- ASME code stamped 150/300 carbon steel or stainless steel body vessel
- Low maintenance – No leaking seals, impeller or motor problems
- All stainless steel internals with durable Inconel X-750 springs
- Externally removable/replaceable seats – Valve and seats can be replaced or cleaned without removing pump cap from body

Table CRE-194-1. PT-300 Pumping Trap Physical Data

Model Number	PT-308	PT-312
	mm	mm
“C” (diameter)	406	406
“G”	140	140
“H”	534	534
“R”	125	125
“T”	305	305
“U”	57	57
“V”	700	700
“Z”	1 017	1 045
Cap Removal	400	400
Weight (kg)	77	87
Number of Cap Bolts	8	8

Maximum Allowable Pressure (Vessel Design) 10 bar @ 343°C.
Maximum Operating Pressure 9 bar.
All models are **not** CE Marked according to the PED (97/23/EC).

All dimensions and weights are approximate. Use certified print for exact dimensions. Design and materials are subject to change without notice.

Armstrong International SA • Parc Industriel des Hauts-Sarts (2e Avenue) • 4040 Herstal • Belgium
Tel.: +32 (0)4 240 90 90 • Fax: +32 (0)4 248 13 61
www.armstrong.be • marketing@armstrong.be

PT-300 Series Pumping Trap

Carbon Steel, In-Line Connections

For capacities up to 9 040 kg/h (steam motive)... Discharge per cycle 45 liters

Table CRE-195-1. PT-300 Pumping Trap Materials	
Body and Cap	Fabricated Steel 10 bar ASME Sec. VIII, Design "U" Stamp
Cap Gasket	Compressed Non-Asbestos
Bolts	SA - 193 gr B7
Inlet Valve Assembly	Stainless Steel
Vent Valve Assembly	Stainless Steel
Valve Assembly Washers	Zinc-Plated Steel
Mechanism Assembly	Cast Stainless Steel
Plug	Steel
Springs	Inconel X-750

Table CRE-195-2. PT-300 Pumping Trap Connection Sizes		
	PT-308	PT-312
Inlet	DN 50	DN 80
Inlet Check Valve	DN 50	DN 80
Outlet	DN 50	DN 50
Outlet Check Valve	DN 50	DN 50
Motive Valve	1/2" BSPT	
Vent Valve	1" BSPT	
Gauge Glass	1/2" NPT	
Cycle Counter	1/2" NPT	

Table CRE-195-3. PT-300 Pumping Trap Capacities (300 mm Filling Head)

Motive Pressure	Total Lift or Back Pressure	PT-308 DN 50 x DN 50		PT-312 DN 80 x DN 50	
		Steam	Air	Steam	Air
bar	bar	kg/h	kg/h	kg/h	kg/h
1,0	0,35	3 130	4 175	4 080	5 580
1,7		4 620	4 945	5 990	6 440
3,5		4 810	5 035	6 850	7 170
5,0		4 900	5 125	6 940	7 305
7,0		5 080	On request	7 030	On request
8,5		5 260	On request	7 530	On request
1,7	1,0	3 175	4 580	4 080	5 080
3,5		4 355	4 945	5 805	6 260
5,0		4 875	5 035	6 440	6 805
7,0		4 945	On request	6 485	On request
8,5		5 130	On request	6 850	On request
2,5	1,5	3 220	4 175	3 675	5 215
3,5		3 765	4 630	4 630	5 785
5,0		4 580	4 990	5 670	6 125
7,0		4 630	On request	5 760	On request
8,5		4 670	On request	5 900	On request
3,5	3,0	2 585	3 450	2 995	4 445
4,0		2 995	3 990	3 810	4 760
5,0		3 450	4 580	4 445	5 760
7,0		3 810	On request	4 580	On request
8,5		4 265	On request	4 670	On request
4,5	4,0	2 040	3 175	2 720	4 630
5,0		2 130	3 220	2 905	4 720
7,0		2 905	On request	3 220	On request
8,5		2 995	On request	3 360	On request

Notes: Above capacities are the results of **actual** steam testing using a minimum 93°C condensate. Published capacities are based on the use of external check valves supplied by Armstrong. Fill head measured from drain point to top of pump cap. Discharge per cycle: 45 liters.

Table CRE-195-4. PT-300 Capacity Conversion Factors for Other Fill Heads

Model	Filling Head (mm)				
	0	150	300	600	900
PT-308	0,70	0,90	1,00	1,20	1,30
PT-312	0,70	0,85	1,00	1,08	1,20

Note: Filling head is measured from drain of receiver to top of pump's cap.

Options

- Gauge Glass Assembly with Guards (Brass or Cadium Plated Carbon Steel)
- Digital Cycle Counter (Open or Closed Systems; with or without Auxiliary contacts)
- Insulation Jacket

This pump might be suitable for special applications. Please consult factory

All dimensions and weights are approximate. Use certified print for exact dimensions. Design and materials are subject to change without notice.

PT-104 Low Profile Pumping Trap

Cast Iron, In-Line or Same Side Connections

For capacities up to 900 kg/h (steam motive)... Discharge per cycle 7 liters

The patented Armstrong PT-104 Mini Pump Trap is one of the smallest non-electric solution that can move condensate or other liquids from lower to higher points and from lower to higher pressures. Condensate can be returned at temperatures well above the 99°C limit of conventional electric centrifugal pumps without the headaches of leaking seals or cavitation problems. The PT-104 Mini Pump Trap is the small solution for a big problem.

Features

- Non-electric – Operates using inexpensive steam, air or inert gas
- Low maintenance – No leaking seals, impeller or motor problems, reducing maintenance and downtime
- Small and compact – Low profile body fits in tight space requirements while allowing minimal fill head
- Reduced installation cost – Single trade required for installation and maintenance
- Explosion proof – Standard unit intrinsically safe
- All stainless steel internals – Corrosion resistant with long service life
- Long-lasting Inconel X-750 springs

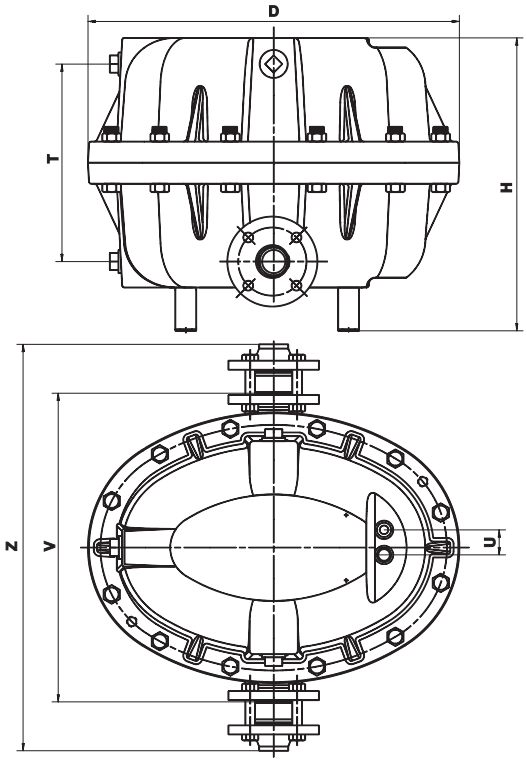

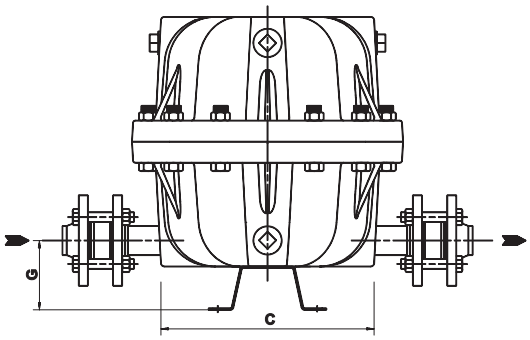

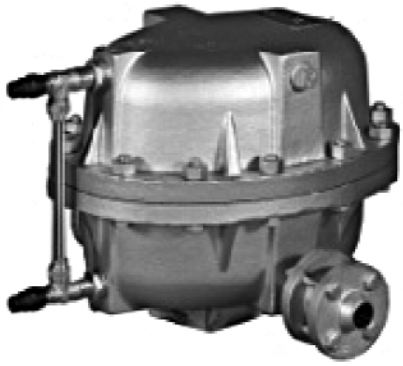

Table CRE-196-1. PT-104 Pumping Trap Physical Data	
Model Number	**PT-104**
	mm
"C"	273
"D"	470
"G"	125
"H"	400
"T"	256
"U"	32
"V"	435
"Z"	570
Cap Removal	150
Weight (kg)	66
Number of Cap Bolts	12
Maximum Operating Pressure	6 bar
Maximum Allowable Pressure (vessel design)	10 bar @ 232°C

This model is CE Marked according to the PED (97/23/EC).

Table CRE-196-2. PT-104 Pumping Trap Materials	
Body and Cap	Cast Iron ASTM A48 cl.30
Motive / Vent Valves	Stainless Steel
Mechanism Assembly	Cast Stainless Steel
Spring	Inconel X-750
Bolts	SA 449
Nuts	ASTM A194 Gr. 2H
Plug	Cast Iron
Gasket	Compresses Non-Asbestos

Table CRE-196-3. PT-104 Pumping Trap Connection Sizes	
Inlet	DN 25
Inlet Check Valve	DN 25
Outlet	DN 25
Outlet Check Valve	DN 25
Motive Valve	1/2" NPT
Vent Valve	1/2" NPT
Gauge Glass	1" NPT
Cycle Counter	1" NPT

All dimensions and weights are approximate. Use certified print for exact dimensions. Design and materials are subject to change without notice.

Armstrong International SA • Parc Industriel des Hauts-Sarts (2e Avenue) • 4040 Herstal • Belgium
Tel.: +32 (0)4 240 90 90 • Fax: +32 (0)4 248 13 61
www.armstrong.be • marketing@armstrong.be

PT-104 Low Profile Pumping Trap

Cast Iron, In-Line or Same Side Connections

For capacities up to 900 kg/h (steam motive)... Discharge per cycle 7 liters

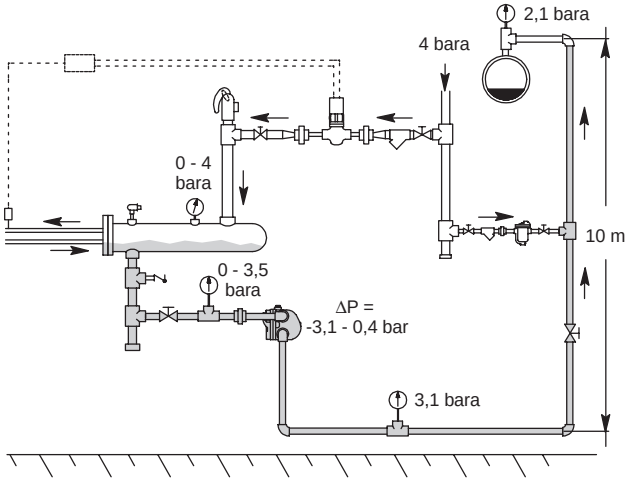

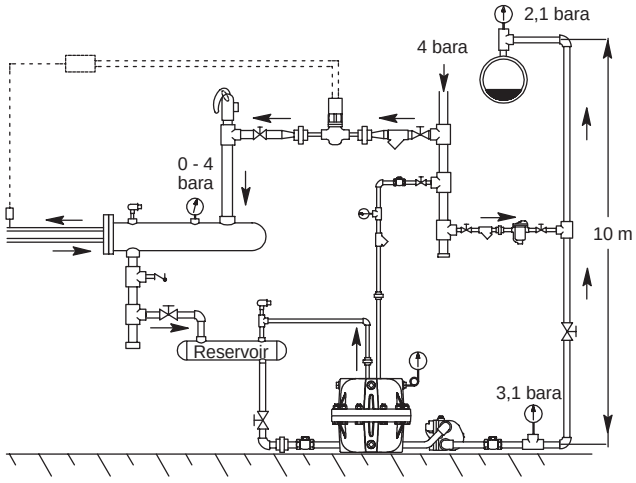

Big Problem = Maintenance Headache!

1. Space constraints – Heat exchanger equipment being low to the floor.
2. No condensate drainage – Back pressure exceeds system pressure.
3. Heat exchanger equipment floods, causing equipment damage from:
   - Water hammer – Steam and condensate occupying the same space
   - Corrosion – Non-condensable gases are reabsorbed into the condensate, forming carbonic acid
4. Production loss – Due to inaccurate temperature control.

Small Solution = Long, trouble-free service life for heat exchanger equipment due to condensate and non-condensable gas evacuation.

1. Small and compact – PT-104 Mini Pump Trap fits in tight spaces.
2. Condensate drainage – Motive pressure to PT-104 Mini Pump Trap provides enough pressure to lift condensate to return lines.
3. Heat exchanger is free and clear of condensate due to proper drainage, provided by the PT-104 Mini Pump Trap.
4. Accurate temperature control providing less product loss.

Table CRE-197-1. PT-104 Capacity Conversion Factors for Other Fill Heads

Filling Head (mm)	0	150	300	600 or greater
PT-104	0,7	1,0	1,2	Consult factory

Note: Filling head is measured from drain of receiver to top of pump's cap.

Options

- Gauge Glass Assembly with Guards (Brass or Cadium Plated Carbon Steel)
- Digital Cycle Counter (Open or Closed Systems; with or without Auxiliary contacts)
- Insulation Jacket

This pump might be suitable for special applications. Please consult factory

Table CRE-197-2. PT-104 Pumping Trap Capacities (150 mm Filling Head)

Motive Pressure	Total Lift or Back Pressure	Steam Motive	Air Motive
bar	bar	kg/h	kg/h
1,0	0,35	510	950
1,7		590	1 000
3,5		705	1 030
5,0		750	1 045
1,7	1,0	295	860
3,5		320	930
5,0		340	950
2,5	1,5	180	815
3,5		205	880
5,0		230	930
3,5	3,0	115	735
5,0		135	825

Notes: Above capacities are the results of **actual** steam testing using a minimum 93°C condensate. Published capacities are based on the use of external check valves supplied by Armstrong. Fill head measured from drain point to top of pump case. Discharge per cycle 7 liters.

PT-516 High Capacity Pumping Trap

Carbon Steel, In-Line Connections

For capacities up to 35 920 kg/h (steam motive)... Discharge per cycle 475 liters



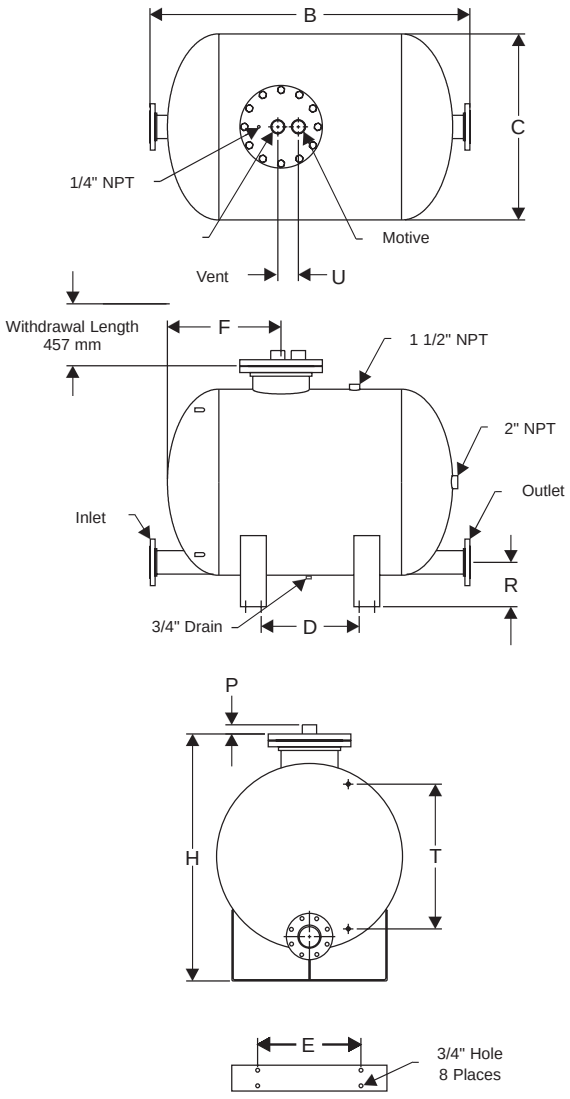

Effective recovery and return of hot condensate are essential to overall plant efficiency while conserving energy. Large amounts of condensate provide the best opportunities to save energy.

The Armstrong PT-516 High Capacity Pump Trap is the low maintenance, non-electric solution to moving large amounts of condensate and other liquids from low points, low pressures or vacuum spaces to an area of higher elevation or pressure. Condensate can be returned at temperatures well above the 99°C limit of conventional electric pumps without the headaches of leaking seals or cavitation.

Features

- Non-electric – Uses inexpensive steam, air or gas to operate the pump trap
- No leaking seals/packings, impeller wear, electrical or motor problems – Reduces maintenance and downtime
- Single trade installation or repair reduces installation and maintenance costs
- Direct spring/float actuated mechanism – No maintenance intensive diaphragm operated valve mechanism
- Compression spring design – Reduces downtime, ensures performance and reliability
- Rugged stainless steel internals – Durable and corrosion resistant for enhanced service life
- Closed loop – No motive steam or flash steam loss, therefore capturing and returning all valuable kJ back to the system (see General Applications on page CRE-188)
- Safety – Pump can be placed in flooded pits without fear of electrocution or circuit breaker defaults
- Explosion proof – Standard unit intrinsically safe without additional cost

Table CRE-198-1. PT-516 Pumping Trap Physical Data

	mm
Inlet Connection	4" 150# ANSI Flg.
Outlet Connection	4" 150# ANSI Flg.
Motive Connection	2" NPT
Vent Connection	2" NPT
Gauge Glass Connection	1/2" NPT
"B"	1 574
"C"	914
"D"	484
"E"	508
"F"	559
"H"	1 219
"P"	44
"R"	222
"T"	711
"U"	100
Weight	366
Number of Bolts	12

Maximum Operating Pressure on standard unit: 10 bar.
For higher pressure, please consult factory.
Maximum Allowable Pressure (standard vessel design): 10 bar @ 277°C.
21 bar vessel available upon request.
This model is **not** CE Marked according to the PED (97/23/EC).

All dimensions and weights are approximate. Use certified print for exact dimensions. Design and materials are subject to change without notice.

PT-516 High Capacity Pumping Trap

Carbon Steel, In-Line Connections

For capacities up to 35 920 kg/h (steam motive)... Discharge per cycle 475 liters

Typical Applications

- Low pressure heating systems
- Process heat exchanger or coils with modulating steam control
- Remote installations (tracing, tank farms or remote coils)
- Systems under vacuum
- Hazardous (explosion proof) areas
- Caustic environments
- Sumps or submersed areas

Table CRE-199-1. PT-516 Pumping Trap Materials

Name of Part	Description
Cap, Body, Bolting	Fabricated Steel 10 bar ASME Sec. VIII Design "U" Stamp Coded
Cap Gasket	Compressed Non-Asbestos
Inlet Valve Assembly	Stainless Steel
Vent Valve Assembly	Stainless Steel
Mechanism Assembly: Frame, Float & Spring	Stainless Steel

Notes: 21 bar ASME vessel available upon request. PT-516 available in all stainless steel. Consult factory.

Armstrong PT-516 Pump Trap Sizing and Selection

Table CRE-199-2. PT-516 Pumping Trap Capacities (600 mm Filling Head)

Motive Pressure	Total Lift or Back Pressure	PT-516 4" x 4"	
		Steam	Air
bar	bar	kg/h	kg/h
1,0	0,35	13 150	26 160
1,7		16 870	28 110
3,5		21 925	30 750
5,0		24 890	32 300
7,0		26 975	33 400
10,0		29 930	On request
1,7	1,0	16 670	23 055
3,5		20 520	26 338
5,0		23 180	28 258
7,0		25 275	29 620
10,0		28 570	On request
2,5	1,5	13 260	20 990
3,5		15 170	23 140
5,0		17 500	25 575
7,0		19 275	27 305
10,0		21 965	On request
3,5	3,0	11 900	18 725
4,0		12 420	19 990
5,0		13 055	21 535
7,0		13 870	23 530
10,0		15 025	On request
4,5	4,0	11 790	14 540
5,0		11 975	15 215
7,0		12 730	18 590
10,0		13 800	On request

Notes: Above capacities are the results of **actual** steam testing using a minimum 93°C condensate. Published capacities are based on the use of external check valves supplied by Armstrong. Discharge per cycle: 475 liters.

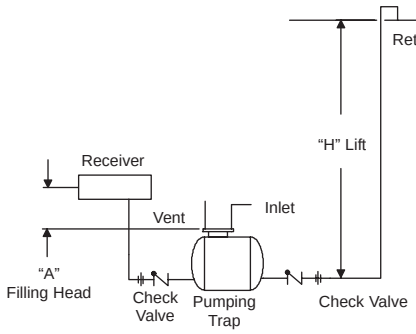

Table CRE-199-3. PT-516 Capacity Conversion Factors for Other Fill Heads

Model	Filling Head (mm)					
	0	150	300	400	600	900
PT-516	0,7	0,75	0,8	0,85	1,0	1,08

Note: Filling head is measured from drain of receiver to top of pump's cap.

Options

- Gauge Glass Assembly with Guards (Brass or Carbon Steel, Cadium Plated)
- Digital Cycle Counter (Open or Closed Systems; with or without Auxiliary contacts)
- Insulation Jacket

This pump might be suitable for special applications. Please consult factory

Application Data

1. Fluid to be pumped: . . . . . .
2. Temperature of fluid to be pumped: . . . . . ❑ °C
3. Specific gravity: . . . . . .
4. Required flow rate: . . . . . ❑ m³/h ❑ kg/h
5. Equipment pressure: . . . . . ❑ Modulation
   . . . . . Min..... to Max.....
   . . . . . ❑ bar
6. Fill head distance (A): . . . . . ❑ mm
7. Discharge condensate return line size: . . . . . ❑ mm
8. Motive gas: . . . . . ❑ Steam ❑ Air ❑ Gas
9. Motive pressure available: . . . . ❑ bar ❑ Other.....
10. Return line pressure: . . . . . ❑ bar ❑ Other.....
11. Vertical lift (H): . . . . . ❑ m
12. Can pump be vented to atmosphere? . . . . . ❑ Yes ❑ No
13. Is there a condensate reservoir? . . . . . ❑ Yes ❑ No
    If yes, what size?.....
14. Is reservoir vented? . . . . . ❑ Yes ❑ No
15. Would you like Armstrong to quote on a packaged pre-piped engineered system? ❑ Yes ❑ No

All dimensions and weights are approximate. Use certified print for exact dimensions. Design and materials are subject to change without notice.

Reservoir and Vented Receiver Sizing – EPT-200/400, PT-300/104

Table CRE-200-1. Inlet Reservoir Pipe Sizing for Closed Systems

Condensate Load	Reservoir Pipe Diameter					
kg/h	2"	3"	4"	6"	8"	10"
	Length of Pipe					
	mm	mm	mm	mm	mm	mm
230	1 200	700	400			
450	1 400	600	400			
680	2 100	900	600			
900	2 700	1 200	700			
1 140	3 400	1 500	900	500		
1 360	4 100	1 800	1 100	600		
1 820	5 500	2 600	1 500	700		
2 270		3 000	1 800	900	400	
2 720		3 700	2 100	1 100	600	
3 180		4 400	2 600	1 200	600	
3 630		5 000	2 900	1 400	700	400
4 080			3 400	1 500	900	600
4 540			3 700	1 700	900	600
4 990			4 000	1 800	1 100	600
5 440			4 300	2 000	1 200	700

Note: When draining condensate from a single piece of equipment in a **closed system**, to achieve maximum energy efficiency a reservoir should be installed horizontally above and ahead of the pump trap. Sufficient reservoir volume is required above the filling head level to hold condensate during the pump trap discharge cycle. The chart above shows the minimum reservoir sizing, based on the condensate load, to prevent equipment flooding during the pump trap discharge cycle.

Table CRE-200-2. Vented Receiver Sizing for Open Systems

Flash Steam	Receiver Diameter	Receiver Length	Vent Line Diameter
kg/h	in	mm	in
35	4"	900	1 1/2"
70	6"	900	2"
140	9"		2 1/2"
270	10"		3"
410	12"		4"
540	16"		6"
910	20"		8"

Note: When draining from single or multiple pieces of equipment in an **open system**, a vented receiver should be installed horizontally above and ahead of the pump trap. In addition to sufficient holding volume of the condensate above the fill head of the pump trap to hold the condensate during the pump trap cycle, the receiver must also be sized to allow enough area for flash steam and condensate separation. An overflow could also be added when required. The minimum recommended water seal is 300 mm. This table shows proper receiver tank sizing based on flash steam present. See the chart at right to calculate the percentage of flash steam at a given pressure drop.

Percentage of Flash Steam Formed When Discharging Condensate to Reduce Pressure

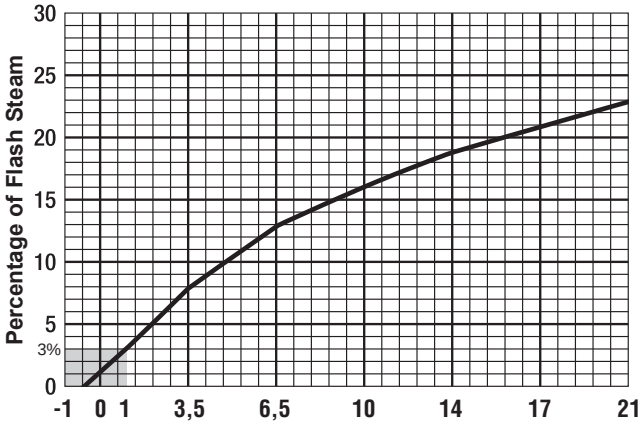

Note: Back pressure = 0 barg

Condensate Recovery Equipment

All dimensions and weights are approximate. Use certified print for exact dimensions. Design and materials are subject to change without notice.

Reservoir and Vented Receiver Sizing – PT-516 Series High Capacity

Either a closed reservoir pipe or a vented receiver is required for proper condensate storage during the pump-down cycle of the pumping trap. Refer to the tables for sizing.

For Closed Reservoir Piping

1. Determine condensate load.
   Example 13 500 kg/h:
   - Reference the Inlet Reservoir Pipe table top right. Find the 13 500 kg/h condensate load in column one. Move across the columns to find the proper pipe sizing.

For Vented Receiver Sizing

1. Determine the pressure from where the condensate is being discharged.
2. Determine condensate load.
   - Reference the chart below to find the pressure that corresponds with the discharge condensate pressure. For this example, use 1 barg.
   - Follow 1 barg to where it intersects the "0" barg curve. Move to the left from intersecting lines for the percentage of flash that will be created. For this example, it will be 3%.
   - Multiply the 3% by the condensate load. For this example, it is 13 500 kg/h. Thus, 13 500 x 0,03 = 405 kg/h of flash steam.

Using the Vented Receiver table bottom right, find the amount of flash steam in column one. Follow the table across to determine the sizing of the vented receiver.

Percentage of Flash Steam Formed When Discharging Condensate to Reduce Pressure

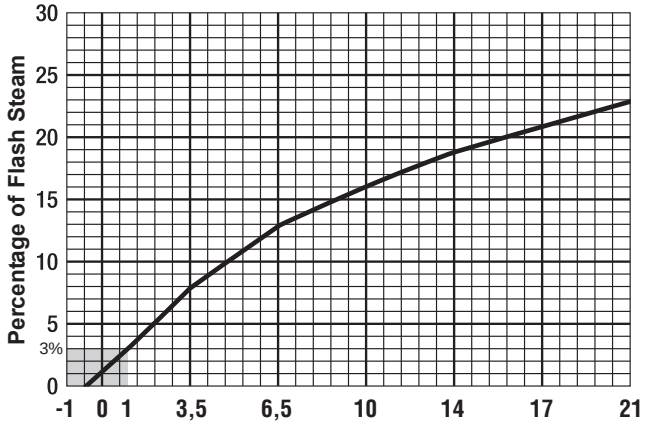

Note: Back pressure = 0 barg

Table CRE-201-1. PT-516 Inlet Reservoir Pipe Sizing for Closed Systems

Condensate Load kg/h	Reservoir Pipe Diameter (in)					
	8"	10"	12"	16"	20"	24"
up to	Length of Pipe (meter)					
4 500	2	1,8	1,5	0,9	0,6	
9 000	3,6	3,5	3,0	2,1	1,2	
13 500		3,6	3,2	2,7	1,8	1,2
18 000		5,2	4,3	3,6	2,4	1,8
22 500			4,9	4,0	2,7	1,8
27 000				4,6	3,3	2,4
31 500					4,6	3,0

Note: When BP/MP is less than 50%, the reservoir diameters above can be reduced by 1/2". When draining condensate from a single piece of equipment in a **closed system**, to achieve maximum energy efficiency (see Closed System figure on page CRE-188) a reservoir should be installed horizontally above and ahead of the pump trap. Sufficient reservoir volume is required above the filling head level to hold condensate during the pump trap discharge cycle. The table above shows the minimum reservoir sizing, based on the condensate load, to prevent equipment flooding during the pump trap discharge cycle.

Table CRE-201-2. PT-516 Vented Receiver for an Open System

Flash Steam kg/h	Receiver Diameter (in)	Receiver Length (mm)	Vent Line Diameter (in)
up to			
450	16"	150	6"
900	20"	150	8"
1 360	24"	150	8"
1 820	26"	150	10"
2 270	28"	150	10"
2 720	30"	180	12"
3 180	32"	180	12"
3 630	36"	180	14"

Note: When draining from single or multiple pieces of equipment in an **open system**, a vented receiver should be installed horizontally above and ahead of the pump trap (see Open System figure on page CRE-188). In addition to sufficient holding volume of the condensate above the fill head of the pump trap to hold the condensate during the pump trap cycle, the receiver must also be sized to allow enough area for flash steam and condensate separation. An overflow could also be added when required. The minimum recommended water seal is 300 mm. The table above shows proper receiver tank sizing based on flash steam present. See chart left to calculate the percentage (%) of flash steam at a given pressure drop.

SEPT-206-OS Open System Package

For capacities up to 2 620 kg/h (steam motive)... Pump discharge per cycle 19 liters

From institutional low pressure steam heating to industrial process critical heat transfer, Armstrong's engineered condensate pump trap packages provide the most efficient and cost-effective solution to customers' condensate recovery requirements.

Armstrong Engineered Condensate Pump Trap Packages provide the following benefits:

- Reduce piping layout, detailed engineering and procurement
- Minimize field labor
- Prevent installation errors and safety mishaps
- Shorten overall project lead times
- Single source responsibility
- Lower total cost of ownership for the customer

To optimize the return on your condensate investment, consider Armstrong Engineered Pump Trap Package Solutions.



Table CRE-202-1. EPT-206-OS Package List of Materials

Pump's Body and Cap	Fabricated Steel P265GH/P275H
Pump's Inlet and Valve Assembly	Stainless Steel
Pump's Mechanism Assembly	Cast Stainless Steel
Pump's Springs	Inconel X-750
Wafer Check Valves	Stainless Steel
Vented Receiver	Carbon Steel
Steam Motive Line Drain Trap	TVS-811 with integral Strainer & Check Valve
Isolation Ball Valves	Carbon Steel
Piping and Flanges	Carbon Steel

Table CRE-202-2. EPT-206-OS Package Connections

	EPT-206-OS
Pump Inlet	DN 40
Pump Outlet	DN 40
Receiver Inlets (2)	2 x DN 40
Receiver Vent	DN 80
Inlet Ball Valve	DN 40
Vent Ball Valve	DN 25
Pump Motive Line	1/2" BSPT
Pump Vent Line	1" BSPT
Drains	1/2" BSPT

Table CRE-202-3. EPT-206-OS Package Dimensions and Weights

Model Number	OS-860	OS-1160	OS-1460	OS-1760
	mm	mm	mm	mm
E	0	300	600	900
F	860	1 160	1 460	1 760
Weight (kg)	128	129	130	131

Note: Standard dimensions can be modified on request.
Maximum Allowable Pressure (Vessel Design) 10 bar @ 343°C.
Maximum Operating Pressure 9 bar.
All models are CE Marked according to the PED (97/23/EC).

Model shown on drawing: SEPT-206-OS-1160

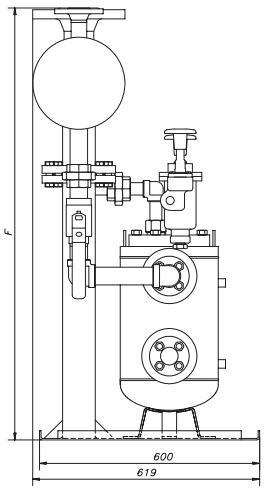

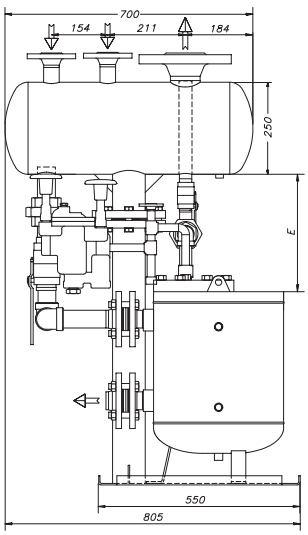

All dimensions and weights are approximate. Use certified print for exact dimensions. Design and materials are subject to change without notice.

Armstrong International SA • Parc Industriel des Hauts-Sarts (2e Avenue) • 4040 Herstal • Belgium
Tel.: +32 (0)4 240 90 90 • Fax: +32 (0)4 248 13 61
www.armstrong.be • marketing@armstrong.be

SEPT-206-OS Open System Package

For capacities up to 2 620 kg/h (steam motive)... Pump discharge per cycle 19 liters

Table CRE-203-1. EPT-206-OS Package Capacities for Steam and Air

Motive Pressure	Total Lift or Back Pressure	OS-860		OS-1160		OS-1460		OS-1760	
		Filling Head 0 mm		Filling Head 300 mm		Filling Head 600 mm		Filling Head 900 mm	
		Steam	Air	Steam	Air	Steam	Air	Steam	Air
bar	bar	kg/h	kg/h	kg/h	kg/h	kg/h	kg/h	kg/h	kg/h
1,0	0,35	956	1 063	1 470	1 635	1 764	1 962	1 911	2 126
1,7		1 131	1 238	1 740	1 905	2 088	2 286	2 262	2 477
3,5		1 203	1 274	1 850	1 960	2 220	2 352	2 405	2 548
5,0		1 238	1 310	1 905	2 015	2 286	2 418	2 477	2 620
7,0		1 274	On request	1 960	On request	2 352	On request	2 548	On request
8,5		1 310	On request	2 015	On request	2 418	On request	2 620	On request
1,7	1,0	848	956	1 305	1 470	1 566	1 764	1 697	1 911
3,5		1 131	1 203	1 740	1 850	2 088	2 220	2 262	2 405
5,0		1 167	1 238	1 795	1 905	2 154	2 286	2 334	2 477
7,0		1 186	On request	1 825	On request	2 190	On request	2 373	On request
8,5		1 203	On request	1 850	On request	2 220	On request	2 405	On request
2,5	1,5	748	813	1 150	1 250	1 380	1 500	1 495	1 625
3,5		852	920	1 310	1 415	2 572	1 698	1 703	1 840
5,0		956	1 027	1 470	1 580	1 764	1 896	1 911	2 054
7,0		1 040	On request	1 600	On request	1 920	On request	2 080	On request
8,5		1 073	On request	1 650	On request	1 980	On request	2 145	On request
3,5	3,0	553	709	850	1 090	1 020	1 308	1 105	1 417
4,0		709	813	1 090	1 250	1 308	1 500	1 417	1 625
5,0		813	884	1 250	1 360	1 500	1 632	1 625	1 768
7,0		894	On request	1 375	On request	1 650	On request	1 788	On request
8,5		930	On request	1 430	On request	1 716	On request	1 859	On request
4,5	4,0	488	709	750	1 090	900	1 308	975	1 417
5,0		585	813	900	1 250	1 080	1 500	1 170	1 625
7,0		780	On request	1 200	On request	1 440	On request	1 560	On request
8,5		832	On request	1 280	On request	1 536	On request	1 664	On request

Notes: Above capacities are the results of **actual** steam testing using a minimum 93°C condensate. Published capacities are based on the use of external check valves supplied by Armstrong. Fill head measured from drain point to top of pump cap. Discharge per cycle : 19 liters

On request, package dimensions could be adapted to existing installation. In that case, Filling Head and capacity might be different. For more information, please consult us or our local Representative.

Options on Pump

- Gauge Glass Assembly with Guards (Brass or Cadium Plated Carbon Steel)
- Digital Cycle Counter (with or without Auxiliary contacts)
- Insulation Jacket

Options on Package

- Pressure Reducing Valve to reduce the pressure of the motive fluid (steam, compressed air, etc.)
- Stainless steel Trap Valve Station on steam motive line
- Liquid Drainer if compressed air is used as motive fluid
- Manometers

This package might be suitable for special applications. Please consult factory

All dimensions and weights are approximate. Use certified print for exact dimensions. Design and materials are subject to change without notice.

SEPT-206-CS Closed System Package

For capacities up to 2 620 kg/h (steam motive)... Pump discharge per cycle 19 liters

Armstrong Engineered Condensate Pump Trap Packages provide the following benefits:

- Reduce piping layout, detailed engineering and procurement
- Minimize field labor
- Prevent installation errors and safety mishaps
- Shorten overall project lead times
- Single source responsibility
- Lower total cost of ownership for the customer



Table CRE-204-1. EPT-206-CS Package List of Materials

Pump's Body and Cap	Fabricated Steel P265GH/P275H
Pump's Inlet and Valve Assembly	Stainless Steel
Pump's Mechanism Assembly	Cast Stainless Steel
Pump's Springs	Inconel X-750
Wafer Check Valves	Stainless Steel
Closed Receiver	Carbon Steel
Steam Trap at Pump Outlet	Model 816 in Cast Iron
Steam Motive Line Drain Trap	TVS-811 with integral Strainer & Check Valve
Air Vent	Model TV-2 in Bronze
Isolation Ball Valves	Carbon Steel
Piping and Flanges	Carbon Steel

Vacuum Breaker is installed as standard

Table CRE-204-2. EPT-206-CS Package Connections

	EPT-206-CS
Pump Inlet	DN 40
Pump Outlet	DN 40
Receiver Inlet	DN 40
816 Trap Outlet	DN 50
Inlet Ball Valve	DN 40
Drain Trap Ball Valve	DN 15
Pump Motive Line	1/2" BSPT
Pump Vent Line	1" BSPT
Drains	1/2" BSPT

Table CRE-204-3. EPT-206-CS Package Dimensions and Weights

Model Number	CS-745	CS-1045	CS-1345	CS-1645
	mm	mm	mm	mm
E	0	300	600	900
F	745	1 045	1 345	1 645
H	1 050	1 350	1 650	1 950
Weight (kg)	202	203	204	205

Note: Standard dimensions can be modified on request.
Maximum Allowable Pressure (Vessel Design) 10 bar @ 343°C.
Maximum Operating Pressure 9 bar.
All models are CE Marked according to the PED (97/23/EC).

Model shown on drawing: SEPT-206-CS-1045

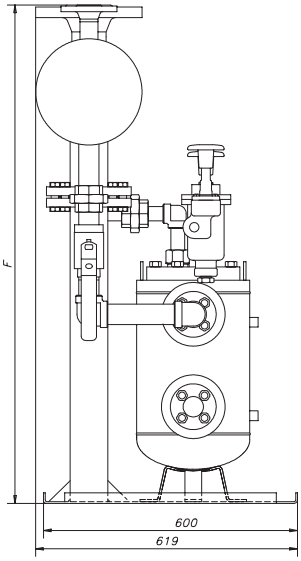

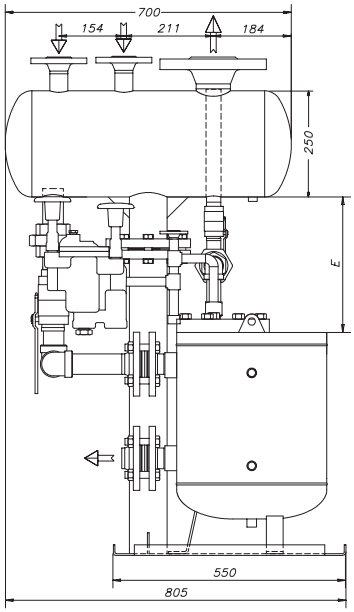

All dimensions and weights are approximate. Use certified print for exact dimensions. Design and materials are subject to change without notice.

Armstrong International SA • Parc Industriel des Hauts-Sarts (2e Avenue) • 4040 Herstal • Belgium
Tel.: +32 (0)4 240 90 90 • Fax: +32 (0)4 248 13 61
www.armstrong.be • marketing@armstrong.be

SEPT-206-CS Closed System Package

For capacities up to 2 620 kg/h (steam motive)... Pump discharge per cycle 19 liters

Table CRE-205-1. EPT-206-CS Package Capacities for Steam and Air

Motive Pressure	Total Lift or Back Pressure	CS-745		CS-1045		CS-1345		CS-1645	
		Filling Head 0 mm		Filling Head 300 mm		Filling Head 600 mm		Filling Head 900 mm	
		Steam	Air	Steam	Air	Steam	Air	Steam	Air
bar	bar	kg/h	kg/h	kg/h	kg/h	kg/h	kg/h	kg/h	kg/h
1,0	0,35	956	Air motive is not advised for closed systems	1 470	Air motive is not advised for closed systems	1 764	Air motive is not advised for closed systems	1 911	Air motive is not advised for closed systems
1,7		1 131		1 740		2 088		2 262	
3,5		1 203		1 850		2 220		2 405	
5,0		1 238		1 905		2 286		2 477	
7,0		1 274		1 960		2 352		2 548	
8,5		1 310		2 015		2 418		2 620	
1,7	1,0	848		1 305		1 566		1 697	
3,5		1 131		1 740		2 088		2 262	
5,0		1 167		1 795		2 154		2 334	
7,0		1 186		1 825		2 190		2 373	
8,5		1 203		1 850		2 220		2 405	
2,5	1,5	748		1 150		1 380		1 495	
3,5		852		1 310		1 572		1 703	
5,0		956		1 470		1 764		1 911	
7,0		1 040		1 600		1 920		2 080	
8,5		1 073		1 650		1 980		2 145	
3,5	3,0	553		850		1 020		1 105	
4,0		709		1 090		1 308		1 417	
5,0		813		1 250		1 500		1 625	
7,0		894		1 375		1 650		1 788	
8,5		930		1 430		1 716		1 859	
4,5	4,0	488		750		900		975	
5,0		585		900		1 080		1 170	
7,0		780		1 200		1 440		1 560	
8,5		832		1 280		1 536		1 664	

In closed systems, only steam is recommended to be used as motive fluid!

Notes: Above capacities are the results of **actual** steam testing using a minimum 93°C condensate. Published capacities are based on the use of external check valves supplied by Armstrong. Fill head measured from drain point to top of pump cap. Discharge per cycle : 19 liters
On request, package dimensions could be adapted to existing installation. In that case, Filling Head and capacity might be different. For more information, please consult Armstrong or its local Representative.

Options on Pump

- Gauge Glass Assembly with Guards (Brass or Cadium Plated Carbon Steel)
- Digital Cycle Counter (with or without Auxiliary contacts)
- Insulation Jacket

Options on Package

- Pressure Reducing Valve to reduce the motive pressure
- Stainless steel Trap Valve Station on steam motive line
- Steam Trap in Carbon Steel
- Manometers

This package might be suitable for special applications. Please consult factory

All dimensions and weights are approximate. Use certified print for exact dimensions. Design and materials are subject to change without notice.

SEPT-412-OS Open System Package

For capacities up to 7 310 kg/h (steam motive)... Discharge per cycle 29 liters

Table CRE-206-1. List of Materials	
Pump's Body and Cap	Fabricated Steel P265GH/P275H
Pump's Inlet and Valve Assembly	Stainless Steel
Pump's Mechanism Assembly	Cast Stainless Steel
Pump's Springs	Inconel X-750
Wafer Check Valves	Stainless Steel
Vented Receiver	Carbon Steel
Steam Motive Line Drain Trap	TVS-811 with integral Strainer & Check Valve
Isolation Ball Valves	Carbon Steel
Piping and Flanges	Carbon Steel

Table CRE-206-2. Connections	
	EPT-412-OS
Pump Inlet	DN 80
Pump Outlet	DN 50
Receiver Inlet	DN 80
Receiver Vent	DN 200
Inlet Ball Valve	DN 80
Vent Ball Valve	DN 40
Pump Motive Line	1/2" BSPT
Pump Vent Line	1" BSPT
Drains	1/2" BSPT

Table CRE-206-3. Dimensions and Weights				
Model Number	**OS-1340**	**OS-1640**	**OS-1940**	**OS-2240**
	mm	mm	mm	mm
E	0	300	600	900
F	1 340	1 640	1 940	2 240
Weight (kg)	340	350	360	370

Note: Standard dimensions can be modified on request.
Maximum Allowable Pressure (Vessel Design) 10 bar @ 343°C.
Maximum Operating Pressure 9 bar.
All models are CE Marked according to the PED (97/23/EC).

Model shown on drawing: SEPT-412-OS-1640

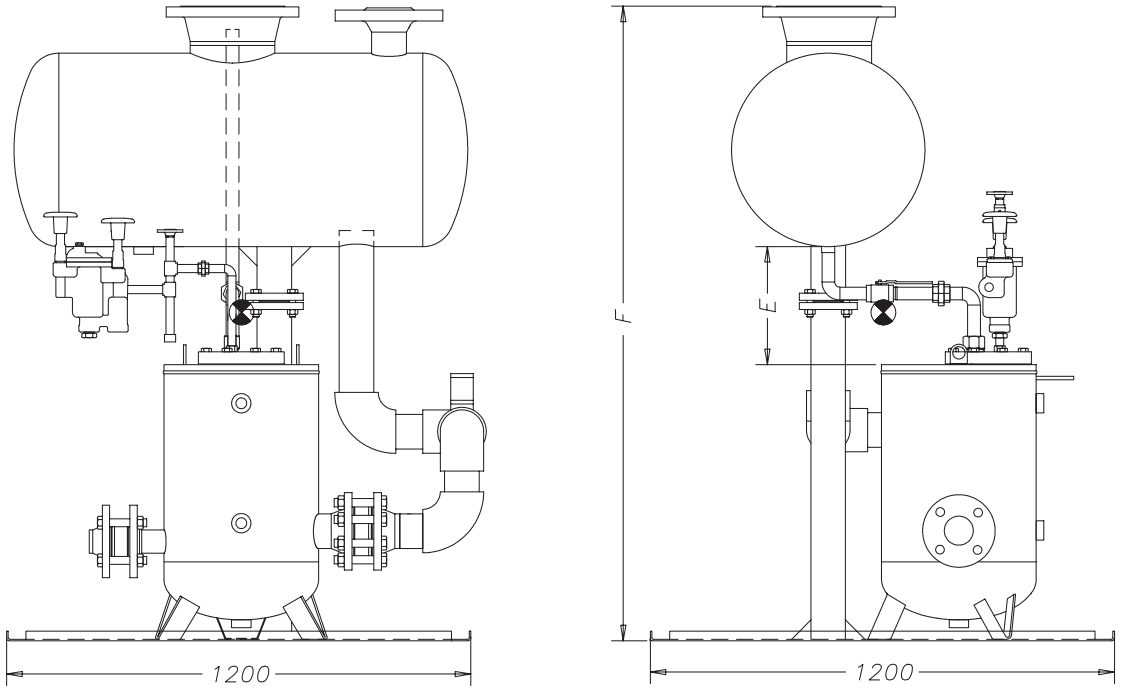

All dimensions and weights are approximate. Use certified print for exact dimensions. Design and materials are subject to change without notice.

Armstrong International SA • Parc Industriel des Hauts-Sarts (2e Avenue) • 4040 Herstal • Belgium
Tel.: +32 (0)4 240 90 90 • Fax: +32 (0)4 248 13 61
www.armstrong.be • marketing@armstrong.be

SEPT-412-OS Open System Package

For capacities up to 7 310 kg/h (steam motive)... Discharge per cycle 29 liters

Table CRE-207-1. Capacities for Steam and Air

Motive Pressure	Total Lift or Back Pressure	OS-1340		OS-1640		OS-1940		OS-2240	
		Filling Head 0 mm		Filling Head 300 mm		Filling Head 600 mm		Filling Head 900 mm	
		Steam	Air	Steam	Air	Steam	Air	Steam	Air
bar	bar	kg/h	kg/h	kg/h	kg/h	kg/h	kg/h	kg/h	kg/h
1,0	0,35	2 618	2 832	3 740	4 045	4 039	4 369	4 488	4 854
1,7		3 843	4 071	5 490	5 815	5 929	6 280	6 588	6 978
3,5		4 088	4 242	5 840	6 060	6 307	6 545	7 008	7 272
5,0		4 193	4 312	5 990	6 160	6 469	6 653	7 188	7 392
7,0		4 228	On request	6 040	On request	6 523	On request	7 248	On request
8,5		4 263	On request	6 090	On request	6 577	On request	7 308	On request
1,7	1,0	2 513	2 891	3 590	4 130	3 877	4 460	4 308	4 956
3,5		3 633	3 931	5 190	5 410	5 605	6 064	6 228	6 738
5,0		3 773	4 001	5 390	5 440	5 821	6 172	6 468	6 858
7,0		3 843	On request	5 490	On request	5 929	On request	6 588	On request
8,5		3 913	On request	5 590	On request	6 037	On request	6 708	On request
2,5	1,5	2 412	2 849	3 445	4 070	3 721	4 396	4 134	4 884
3,5		3 388	3 787	4 840	5 615	5 227	5 843	5 808	6 492
5,0		3 493	3 808	4 990	5 715	5 389	5 875	5 988	6 528
7,0		3 563	On request	5 090	On request	5 497	On request	6 108	On request
8,5		3 633	On request	5 190	On request	5 605	On request	6 228	On request
3,5	3,0	2 027	2 489	2 895	3 555	3 127	3 839	3 474	4 266
4,0		2 412	2 849	3 445	4 070	3 721	4 396	4 134	4 884
5,0		2 653	2 968	3 790	4 240	4 093	4 579	4 548	5 088
7,0		2 832	On request	4 045	On request	4 369	On request	4 854	On request
8,5		2 968	On request	4 240	On request	4 579	On request	5 088	On request
4,5	4,0	1 750	2 321	2 500	3 315	2 700	3 580	3 000	3 978
5,0		1 887	2 412	2 695	3 445	2 911	3 721	3 234	4 134
7,0		2 097	On request	2 995	On request	3 235	On request	3 594	On request
8,5		2 237	On request	3 195	On request	3 451	On request	3 834	On request

Notes: On request, package dimensions could be adapted to existing installation. In that case, Filling Head and capacity might be different. For more information, please consult Armstrong or its local Representative. Discharge per cycle: 29 liters

Options on Pump

- Gauge Glass Assembly with Guards (Brass or Cadium Plated Carbon Steel)
- Digital Cycle Counter (with or without Auxiliary contacts)
- Insulation Jacket

Options on Package

- Pressure Reducing Valve to reduce the motive pressure (steam, compressed air, etc.)
- Stainless steel Trap Valve Station on steam motive line
- Liquid Drainer if compressed air is used as motive fluid
- Manometers

This package might be suitable for special applications. Please consult factory

All dimensions and weights are approximate. Use certified print for exact dimensions. Design and materials are subject to change without notice.

SEPT-412-CS Closed System Package

For capacities up to 7 310 kg/h (steam motive)... Discharge per cycle 29 liters

Table CRE-208-1. List of Materials	
Pump's Body and Cap	Fabricated Steel P265GH/P275H
Pump's Inlet and Valve Assembly	Stainless Steel
Pump's Mechanism Assembly	Cast Stainless Steel
Pump's Springs	Inconel X-750
Wafer Check Valves	Stainless Steel
Closed Receiver	Carbon Steel
Steam Trap at Pump Outlet	Model 150-L-8 in Cast Iron
Steam Motive Line Drain Trap	TVS-811 with integral Strainer & Check Valve
Air Vent	Model TV-2 in Bronze
Isolation Ball Valves	Carbon Steel
Piping and Flanges	Carbon Steel

Vacuum Breaker is installed as standard

Table CRE-208-2. Connections	
	EPT-412-CS
Pump Inlet	DN 80
Pump Outlet	DN 50
Receiver Inlet	DN 80
150-L-8 Trap Outlet	DN 50
Inlet Ball Valve	DN 80
Drain Trap Ball Valve	DN 15
Pump Motive Line	1/2" BSPT
Pump Vent Line	1" BSPT
Drains	1/2" BSPT

Table CRE-208-3. Dimensions and Weights				
Model Number	**CS-1050**	**CS-1350**	**CS-1650**	**CS-1950**
	mm	mm	mm	mm
E	0	300	600	900
F	1 050	1 350	1 650	1 950
H	1 359	1 659	1 959	2 259
Weight (kg)	310	320	335	350

Note: Standard dimensions can be modified on request.
Maximum Allowable Pressure (Vessel Design) 10 bar @ 343°C.
Maximum Operating Pressure 9 bar.
All models are CE Marked according to the PED (97/23/EC).

Model shown on drawing: SEPT-412-CS-1350

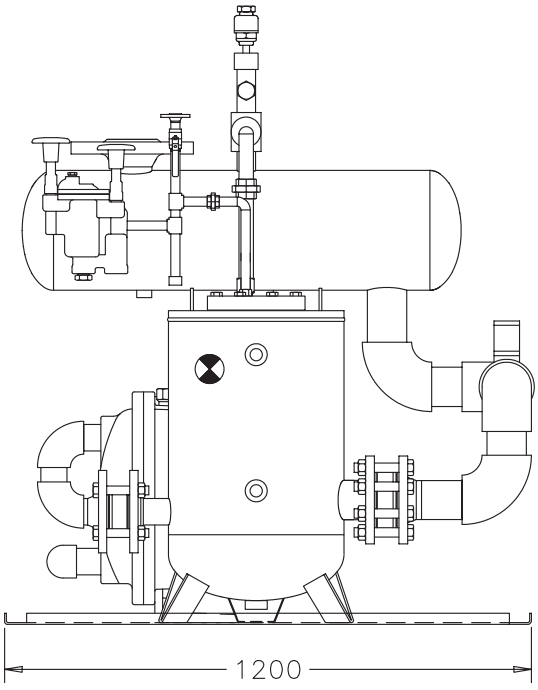

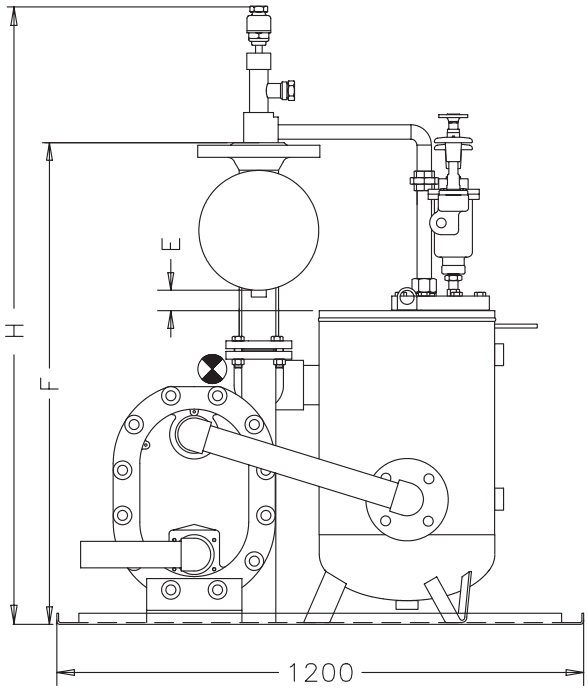

All dimensions and weights are approximate. Use certified print for exact dimensions. Design and materials are subject to change without notice.

Armstrong International SA • Parc Industriel des Hauts-Sarts (2e Avenue) • 4040 Herstal • Belgium
Tel.: +32 (0)4 240 90 90 • Fax: +32 (0)4 248 13 61
www.armstrong.be • marketing@armstrong.be

SEPT-412-CS Closed System Package

For capacities up to 7 310 kg/h (steam motive)... Discharge per cycle 29 liters

Table CRE-209-1. Capacities for Steam and Air

Motive Pressure	Total Lift or Back Pressure	CS-1050		CS-1350		CS-1650		CS-1950	
		Filling Head 0 mm		Filling Head 300 mm		Filling Head 600 mm		Filling Head 900 mm	
		Steam	Air	Steam	Air	Steam	Air	Steam	Air
bar	bar	kg/h	kg/h	kg/h	kg/h	kg/h	kg/h	kg/h	kg/h
1,0	0,35	2 618	Air motive is not advised for closed systems	3 740	Air motive is not advised for closed systems	4 039	Air motive is not advised for closed systems	4 488	Air motive is not advised for closed systems
1,7		3 843		5 490		5 929		6 588	
3,5		4 088		5 840		6 307		7 008	
5,0		4 193		5 990		6 469		7 188	
7,0		4 228		6 040		6 523		7 248	
8,5		4 263		6 090		6 577		7 308	
1,7	1,0	2 513		3 590		3 877		4 308	
3,5		3 633		5 190		5 605		6 228	
5,0		3 773		5 390		5 821		6 468	
7,0		3 843		5 490		5 929		6 588	
8,5		3 913		5 590		6 037		6 708	
2,5	1,5	2 412		3 445		3 721		4 134	
3,5		3 388		4 840		5 227		5 808	
5,0		3 493		4 990		5 389		5 988	
7,0		3 563		5 090		5 497		6 108	
8,5		3 633		5 190		5 605		6 228	
3,5	3,0	2 027		2 895		3 127		3 474	
4,0		2 412		3 445		3 721		4 134	
5,0		2 653		3 790		4 093		4 548	
7,0		2 832		4 045		4 369		4 854	
8,5		2 968		4 240		4 579		5 088	
4,5	4,0	1 750		2 500		2 700		3 000	
5,0		1 887		2 695		2 911		3 234	
7,0		2 097		2 995		3 235		3 594	
8,5		2 237		3 195		3 451		3 834	

In closed systems, only steam is recommended to be used as motive fluid!

Notes: On request, package dimensions could be adapted to existing installation. In that case, Filling Head and capacity might be different. For more information, please consult Armstrong or its local Representative. Discharge per cycle: 29 liters

Options on Pump

- Gauge Glass Assembly with Guards (Brass or Cadium Plated Carbon Steel)
- Digital Cycle Counter (with or without Auxiliary contacts)
- Insulation Jacket

Options on Package

- Pressure Reducing Valve to reduce the motive pressure
- Stainless steel Trap Valve Station on steam motive line
- Steam Trap in Carbon Steel
- Manometers

This package might be suitable for special applications. Please consult factory

All dimensions and weights are approximate. Use certified print for exact dimensions. Design and materials are subject to change without notice.

EAFT Series Flash Tanks

Carbon Steel

For condensate capacities up to 9 070 kg/h... Flash steam up to 1 360 kg/h

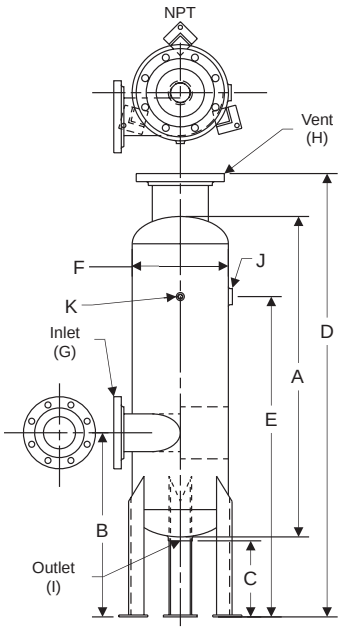



Features

- CE marked vessels
- Standard pressure rating 10 bar (other pressure ratings available upon request)
- Standard models are designed and sized to cover a wide range of applications and loads
- Flash vessels are designed to provide low velocity flash steam with no water carryover
- Quick payback for flash recovery investment
- Special tanks available upon request

Flash Steam Savings Analysis

Part I: Determining the amount of flash steam produced

A. Condensate Load — A = _____ kg/h

B. Annual hours of operation — B = _____ h/year

C. Steam Cost — C = _____ €/ton

D. Flash steam percentage from chart (on page CRE-211) — D = _____ %

E. Flash steam produced:

D x A = flash steam produced — E = _____ kg/h

Part II: Determining value of the flash steam

F. Annual flash steam savings:

$$F = \frac{E \times B \times C}{1\,000}$$

F = _____ €/year

Table CRE-210-1. EAFT Dimensions and Weights (in mm)

Model No.	EAFT-6	EAFT-8	EAFT-12	EAFT-16
A	914	914	1 016	1 058
B	559	584	584	660
C	254	254	241	254
D	1 270	1 301	1 407	1 452
E	965	932	1 016	1 058
F	273	273	406	406
G	2" 150#	3" 150#	4" 150#	6" 150#
H	2 1/2" 150#	4" 150#	6" 150#	6" 150#
I	1 1/2"	1 1/2"	2"	2"
J	3/4"	1"	1 1/2"	2"
K	1/2"	1/2"	1/2"	1/2"

Note: Standard connections “G” and “H” are flanged ANSI 150#, all others are NPT. Available also with DIN flanged PN40 “G” and “H” connections, all others being BSPT. Special sizes available upon request.

Table CRE-210-2. EAFT Capacities

Model No.	Maximum Condensate Load	Maximum Flash Load
	kg/h	kg/h
EAFT-6	900	230
EAFT-8	2 270	450
EAFT-12	4 540	900
EAFT-16	9 070	1 360

Maximum Allowable Pressure (Vessel Design): 10 bar.
Maximum Allowable Temperature: 260°C.
Maximum Operating Pressure: 10 bar.
All models are CE Marked according to the PED (97/23/EC).

All dimensions and weights are approximate. Use certified print for exact dimensions. Design and materials are subject to change without notice.

Armstrong International SA • Parc Industriel des Hauts-Sarts (2e Avenue) • 4040 Herstal • Belgium
Tel.: +32 (0)4 240 90 90 • Fax: +32 (0)4 248 13 61
www.armstrong.be • marketing@armstrong.be

EAFT Series Flash Tanks

Carbon Steel

For condensate capacities up to 9 070 kg/h... Flash steam up to 1 360 kg/h

How much flash steam is available?

1. Follow horizontal axis right to primary discharge pressure.
2. Follow vertically up to secondary pressure curve.
3. Move left to “Percentage of flash steam”.

Example:

Condensate load	=	4 500 kg/h
Primary pressure	=	4,5 bar
Secondary pressure	=	0,6 bar

Percentage of flash	=	10,6%
Secondary steam load	=	464 kg/h

(4 500 kg/h x 0,106 = 464 kg/h)

Selection:

Model EAFT-12

Percentage of Flash Steam formed when discharging Condensate to Reduced Pressure

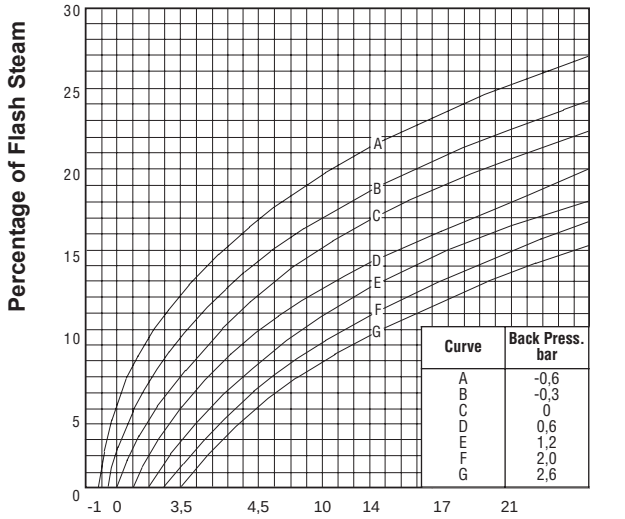

Application Information

A. Condensate Load to Flash Tank: **2 700** kg/h
B. Pressure of Incoming Condensate: **6,5** bar
C. Flash Tank Pressure: **1,2** barg
D. Flash Percentage: **9,5**%
E. Flash Amount = A x (D/100) = **257** kg/h
F. Low Pressure Steam Required: **1 150** kg/h
G. High Pressure Steam (used as Motive): **5** bar
H. Back Pressure: **2** bar

Flash tank will accommodate (A) **2 700 kg/h** of condensate at (B) **6,5 bar**, resulting in (E) **257 kg/h** of flash steam at (C) **1,2 barg**. The flash tank shall be Armstrong Model EAFT-12.

The pressure reducing valve shall pass (F) **1 150 kg/h** of steam from (G) **14 barg** to (C) **1,2 barg**. Pressure reducing valve shall be GP-2000 in DN20.

Considering that back pressure (4) is **2 bar**, it will always be higher than the Flash Tank Pressure (C), which is **1,2 bar**. That is why, a Pumping Trap is necessary. The Pumping Trap shall be an Armstrong EPT-408 as it should discharge (A - E) **2 143 kg/h** with a motive pressure of **5 bar**.

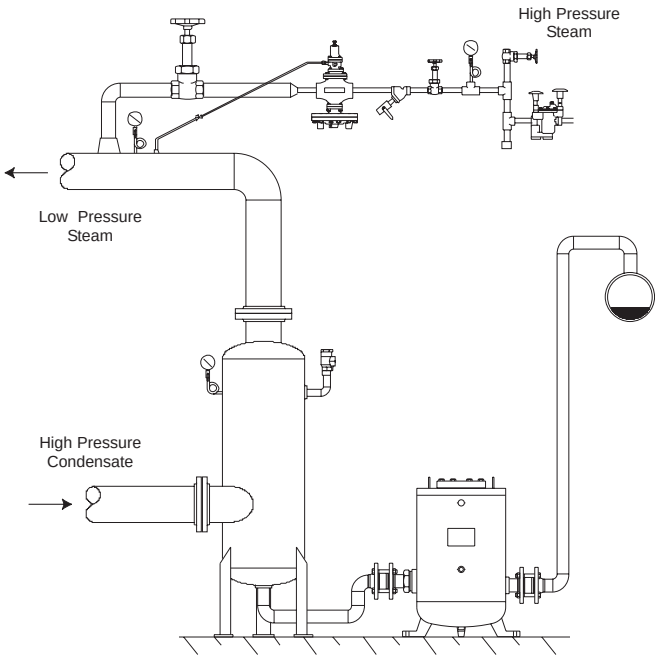

All dimensions and weights are approximate. Use certified print for exact dimensions. Design and materials are subject to change without notice.

Stainless Steel Sump Ejector

Armstrong offers a stainless steel sump ejector for use in draining unwanted water from steam pits, steam tunnels or enclosed spaces. The Sump Ejector uses a snap-acting Inconel X-750 spring-assisted mechanism, which engages a steam motive valve, turning the pump on or off as the float rises and falls. The all stainless steel design will ensure long life in the rather harsh environment of a steam pit.

The Sump Ejector is designed to eliminate maintenance headaches and safety issues surrounding steam pits, tunnels and enclosed spaces.



Features

- All stainless steel construction and design guard against corrosion
- True steam-on, steam-off operation
- Heavy duty Inconel X-750 springs provide a long, trouble-free service life
- The small, compact and unique cast stainless steel design is unlike anything on the market today

Options

- 1 1/2" stainless steel sump ejector available, please consult factory

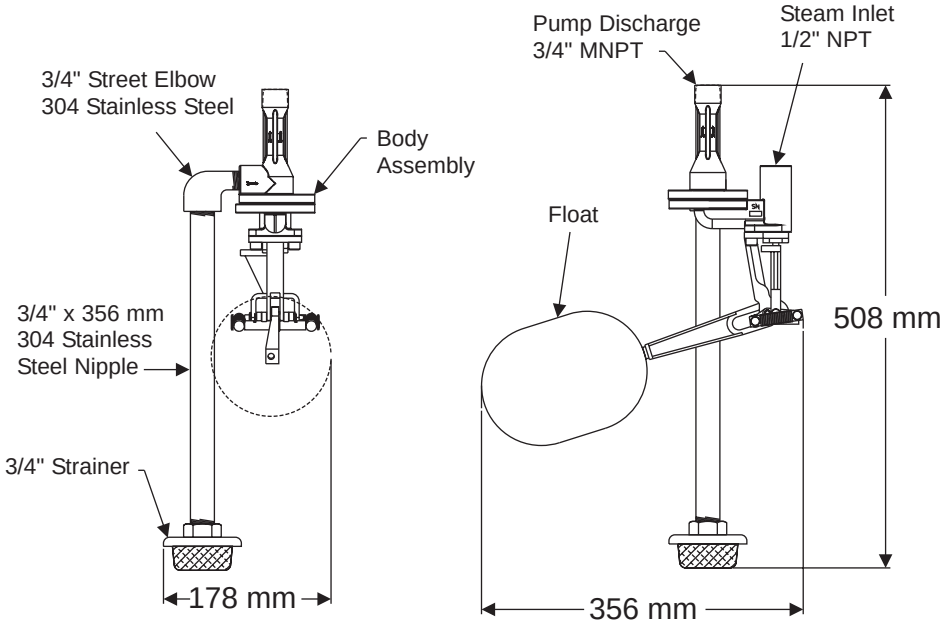

All dimensions and weights are approximate. Use certified print for exact dimensions. Design and materials are subject to change without notice.

Armstrong International SA • Parc Industriel des Hauts-Sarts (2e Avenue) • 4040 Herstal • Belgium
Tel.: +32 (0)4 240 90 90 • Fax: +32 (0)4 248 13 61
www.armstrong.be • marketing@armstrong.be

Stainless Steel Sump Ejector

Table CRE-213-1. Sump Ejector Materials

Name of Part	Material
Mechanism	ASTM A351 CF8M
Springs	Inconel X-750
Springs Ends	304 Stainless Steel
Clevis Pins	304 Stainless Steel
Body	ASTM A351 CF8M
Nozzle	308 Stainless Steel
Seat Retainer	303 Stainless Steel
Motive Ball	440-C Stainless Steel
Motive Valve	316 Stainless Steel
Rod Seal	PTFE
Seal Spring	Hastelloy C-276
Rod Wiper	Nitrile
O-Ring	EPDM
Bolts	18-8 Stainless Steel
Strainer Body	Glass filled nylon
Strainer Mesh	Stainless Steel
Fittings	304 Stainless Steel
Pipe	304 Stainless Steel

Table CRE-213-2. Sump Ejector Capacities in m³/h

Discharge Head (cm)	Water Temperature 16°C						Water Temperature 38°C						Water Temperature 60°C				
	Motive Steam Pressure barg						Motive Steam Pressure barg						Motive Steam Pressure barg				
	3	4	6	7	8	10	3	4	6	7	8	10	4	6	7	8	10
0	1,4	2,12	2,64	2,78	2,92	2,94	1,4	2,05	2,10	1,96	1,82	1,82	1,25	1,21	1,23	1,25	1,25
150	0,9	1,66	2,26	2,53	2,71	2,83	0,7	1,62	1,87	1,85	1,78	1,78	1,03	0,98	1,21	1,23	1,23
300	0,5	1,19	1,89	2,28	2,51	2,71	–	1,19	1,64	1,76	1,73	1,73	0,80	0,75	1,19	1,19	1,19
460	–	0,73	1,50	2,03	2,30	2,62	–	0,75	1,41	1,64	1,66	1,69	–	0,52	1,16	1,16	1,16
610	–	–	1,14	1,75	2,10	2,51	–	–	1,19	1,53	1,62	1,66	–	0,30	1,14	1,12	1,12
760	–	–	–	1,53	1,89	2,39	–	–	–	1,41	1,55	1,62	–	–	1,12	1,09	1,09
910	–	–	–	1,28	1,69	2,28	–	–	–	1,30	1,50	1,57	–	–	1,09	1,05	1,05
1 070	–	–	–	–	1,48	2,17	–	–	–	–	1,46	1,53	–	–	–	1,03	1,03
1 220	–	–	–	–	1,28	2,07	–	–	–	–	1,39	1,50	–	–	–	0,98	0,98
1 370	–	–	–	–	–	1,96	–	–	–	–	–	1,46	–	–	–	–	0,96
1 520	–	–	–	–	–	1,85	–	–	–	–	–	1,41	–	–	–	–	0,91

Note: Maximum operating pressure is 12 bar. No increase in capacity with motive pressure over 10 bar.
This model comply with the article 3.3 of the PED (97/23/EC).

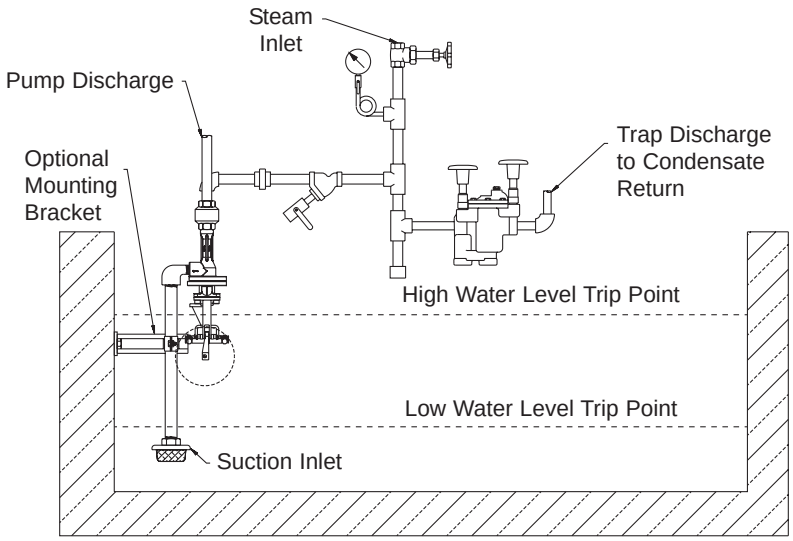

All dimensions and weights are approximate. Use certified print for exact dimensions. Design and materials are subject to change without notice.

GD-22 Posi-Pressure Draining System

For Heat Exchangers up to 500 kg/h of Steam

Forget About Flooded Heat Exchangers

The major cause of flooded heat exchangers is a lack of sufficient pressure differential across the steam trap under modulated steam conditions. With Armstrong's Posi-Pressure Control System, there is always a minimum preset differential pressure between the heat exchanger and the condensate return system. Even if the pressure in the condensate return changes, the Posi-Pressure Controller automatically adjusts to maintain the preset differential.

Forget About Water Hammer

When heat exchangers flood, steam and cold condensate frequently come in contact with each other. When this happens, the steam rapidly condenses, causing water hammer. This water hammer condition can cause damage to heat exchangers, piping and fittings. By eliminating heat exchanger flooding, the Posi-Pressure Control System will solve the problem.

Forget About Frozen Steam Coils

Most steam coils freeze because they are flooded with condensate. Costly – bulky – and high maintenance face and by-pass coil systems were created to solve this problem by maintaining a positive differential steam pressure. Now, with Armstrong's Posi-Pressure Control System, simple and inexpensive modulated control systems can do the same job. However, we must caution that proper steam coil design, steam trapping and venting practices are also required for freeze protection. If assistance is needed, Armstrong's Representatives are trained to analyze your total steam system and offer you solutions to your problems.

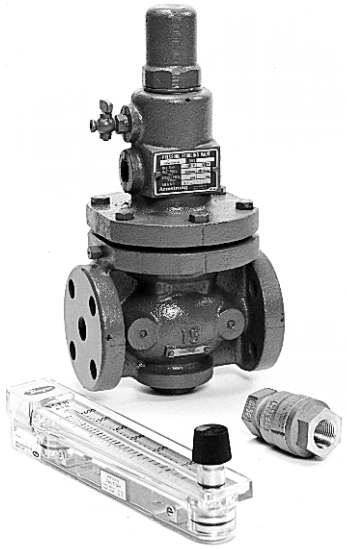

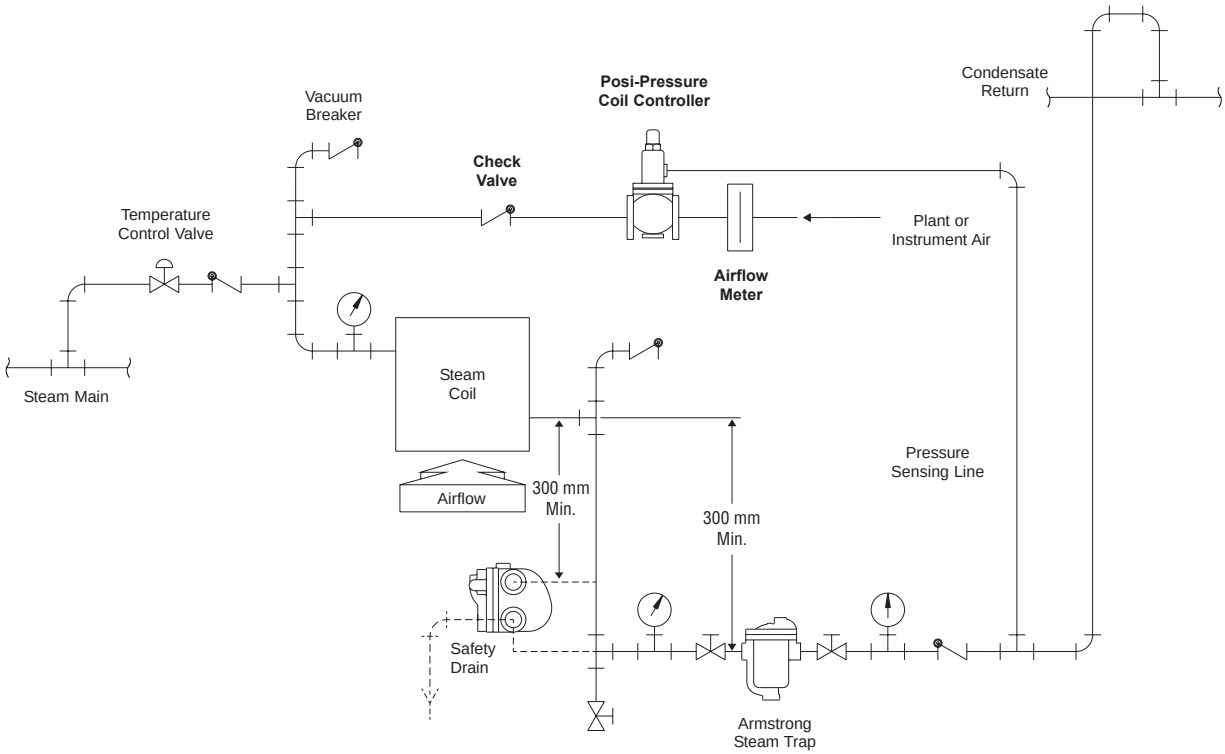

Armstrong International SA • Parc Industriel des Hauts-Sarts (2e Avenue) • 4040 Herstal • Belgium
Tel.: +32 (0)4 240 90 90 • Fax: +32 (0)4 248 13 61
www.armstrong.be • marketing@armstrong.be

GD-22 Posi-Pressure Draining System

For Heat Exchangers up to 500 kg/h of Steam

How Does the Posi-Pressure Control System Work?

A normal steam system may modulate into a vacuum to control temperature. A vacuum breaker is often installed to prevent this condition. Once the vacuum breaker opens, temperature control is accomplished by mixing the air with the steam. The steam/air mixture results in a lower temperature. However, even a vacuum breaker will not work if condensate has to be elevated to an overhead return, or if the return system is pressurized.

The Posi-Pressure Control System acts as a vacuum breaker. Instead of introducing air at atmospheric pressure, the controller injects air at an elevated pressure into the heat exchanger. The user presets the level of elevated air pressure at the time of installation. Rather than a specific pressure, the controller maintains a specific differential pressure across the steam trap. Even if a steam trap fails or other causes change the condensate return pressure, the controller will sense this difference and maintain the preset differential.

How Much Air Will Be Used?

The Posi-Pressure Control System **uses very little air**. The amount depends upon the size of the steam trap selected. Air usage can vary from as little as 0,3 to 2,5 Nm³/h or more on large systems. Once the initial air is introduced, only the leakage through the large vent bucket in the steam trap must be added. This air volume is so low that it is practically undetectable in a deaerator.

Are There Any Other Advantages?

Yes! It is generally recommended that float and thermostatic traps be used on modulated steam systems because they drain better when there is no motive pressure other than the static head of condensate. With a positive pressure always being maintained by the Posi-Pressure Control System, an inverted bucket steam trap with its inherent longer life expectancy can, and must, be used. Since air is injected at a positive pressure, carbon dioxide (the real cause of corrosion) is diluted and swept clear of the heat exchanger.

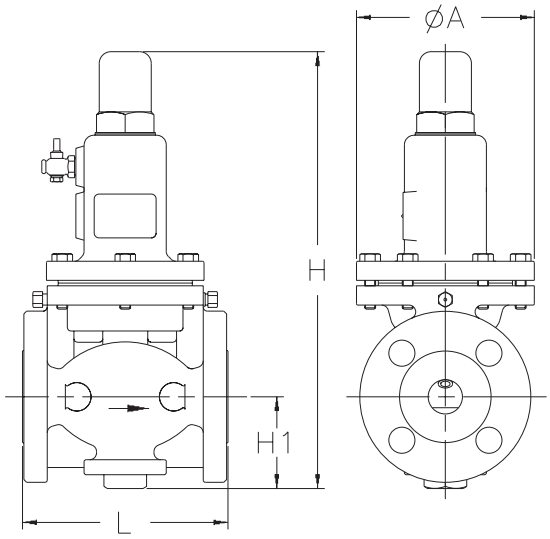

Table CRE-215-1. Dimensions (in mm)

Size	L	A	H	H1	Cv	Weight
1/2"	146	133	298	57	2,5	8,4 kg

Note : "L" Dimension does not include companion flanges. Add 25 mm for companion flanges.
This model comply with the article 3.3 of the PED (97/23/EC).

Table CRE-215-2. Materials

Body	Cast Iron ASTM A48
Main Valve	NBP
Valve Seat	304 Stainless Steel
Diaphragm	NBR
Connection	ANSI 125 lb. Flange with 1/2" NPT companion flange

Table CRE-215-3. Specifications

Application	Inlet Pressure	Reduced Pressure	Maximum Temperature	Minimum Differential
Air	10 bar	0,5 - 2,5 bar	79°C	0,5 bar

All dimensions and weights are approximate. Use certified print for exact dimensions. Design and materials are subject to change without notice.

