

AIC Series
Float & Thermostatic Steam Trap

AIC Series Nodular Iron F&T Steam Trap, for Horizontal Installation, Screwed or Flanged PN16

Suitable up to 14 barg and 900 kg/h

Armstrong **AIC Series** F&T traps are designed for industrial service up to 14 barg. They feature all the benefits of Armstrong F&T traps, such as operation against back pressure, continuous drainage, high-capacity venting of air and CO_2, long life and dependable service and enjoys the convenience of in-line connections.

Armstrong AIC Series F&T traps are the perfect solution for applications where there is a need to vent air and non-condensable gases quickly at start-up.

Note: Float & Thermostatic steam traps should not be used in systems where freezing or excessive hydraulic shocks can occur.

Armstrong AIC Series are available with screwed connections (model AIC) or DIN flanged (model AICF having standard face-to-face dimensions).

Armstrong offers also DIN flanged Inverted Bucket, Bimetallic, Thermodynamic and Thermostatic steam traps with standard face-to-face dimensions.

How to Order:

Pressure	Model	Connection Size	Option
75	**AIC**	**2**	**VB**
15 = 1 bar **30** = 2 bar **75** = 5 bar **125** = 8,5 bar **200** = 14 bar	**AIC** = Screwed Connection	**2** = 1/2” **3** = 3/4” **4** = 1”	**VB** = Vacuum Breaker (limited to 10 bar)
	AICF = DIN Flanged Connection	**2** = DN15 **3** = DN20 **4** = DN25	

Pressure / Temperature Rating:

- Maximum Allowable Pressure: 17 barg (AICF model is limited to PN16)
- Maximum Allowable Temperature: 232°C
- Maximum Operating Pressure: 14 barg

Armstrong®
Intelligent System Solutions™
STEAM • AIR • HOT WATER

AIC Series F&T Steam Trap, Screwed or Flanged PN16

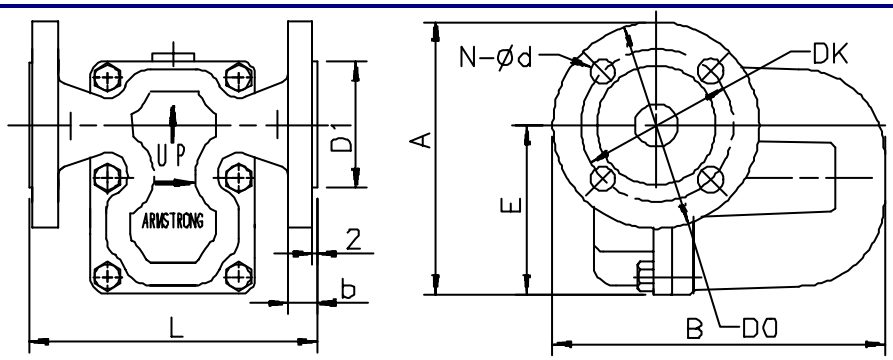

Table 2-1. Available Connections and Face-To-Face Dimensions

Connection	1/2" DN15	3/4" DN20	1" DN25
"A" (Height Screwed) in mm	135	135	135
"A" (Height Flanged PN16) in mm	142	147	152
"B" (Length Screwed) in mm	175	175	175
"B" (Length Flanged PN16) in mm	175	180	185
"L" (Face-to-face Screwed) in mm	160	160	160
"L" (Face-to-face Flanged PN16) in mm	150	150	160
"b" (Flange width) in mm	16	16	18
"E" (Bottom to centerline of inlet) in mm	96		
"D_1" in mm	ø 48	ø 58	ø 68
"Do" in mm	ø 95	ø 105	ø 115
"Dk" in mm	ø 65	ø 75	ø 85
"N - ød" in mm	4 - ø 14		
Vacuum Breaker (optional) in inch	1/4"		
Weight in kg screwed	4,4 kg	4,4 kg	4,4 kg
Weight in kg flanged	6,2 kg	6,5 kg	7,0 kg

This model complies with the Article 3.3 of the PED (97/23/EC)

Capacity Chart

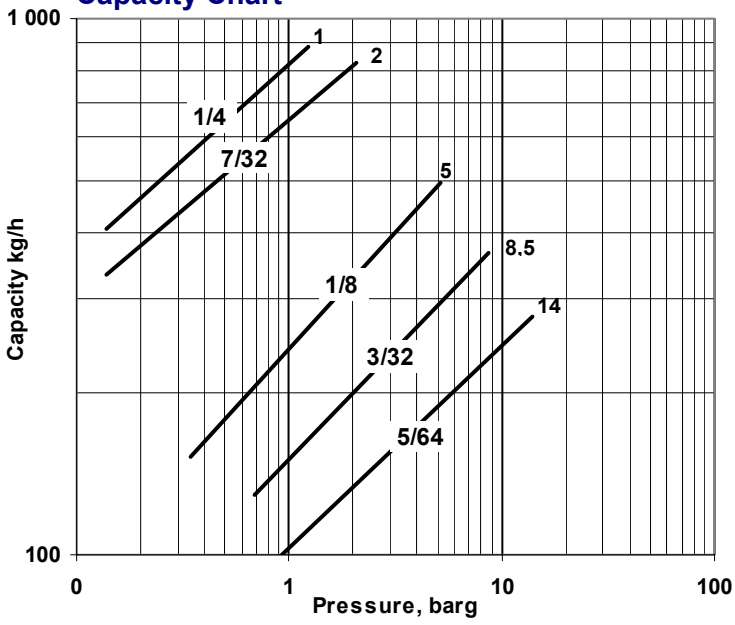

Table 2-2. Materials

Body & Cap	EN-GJS-400-15 (EN1563)
Gasket	Graphite
Valve	Stainless Steel 440
Seat	Stainless Steel 303
Valve Retainer	Stainless Steel 304
Lever	Stainless Steel 304
Guide Pin Assembly	Stainless Steel 304
Float	Stainless Steel 304
Thermostatic Air Vent	Hastelloy Wafer
Hex Bolt	SAE Grade B2

All dimensions and weights are approximate. Use certified drawings for exact dimensions. Design and materials are subject to change without notice.

ARMSTRONG INTERNATIONAL SA
Parc Industriel des Hauts-Sarts, 2ème Avenue, B-4040 Herstal, BELGIUM
Tel: +32/4/240.90.90 – Fax: +32/4/240.40.33
-mail: marketing@armstrong-eu.com – www.armstrong-eu.com

Bulletin AIC/A - 01/04